Spec Sheets

200PD-25 Plateform Mounts Diamond



Item # 200PD-25 Plateform Mounts Diamond
Manufacturer: Parker Lord Corporation

Specifications

A (in)	**2**
Axial Static Spring Rate (lbs/in)	**400**
Axial Static Spring Rate (Metric)	**70.1**
B (in)	**2.25**
C (in)	**1.75**
D (in)	**0.391**
E (in)	**0.196**
Enclosure Shape	**Diamond**
F (in)	**0.062**
F (mm)	**1.6**
G (in)	**0.59**
G (mm)	**15**
I (in)	**1**

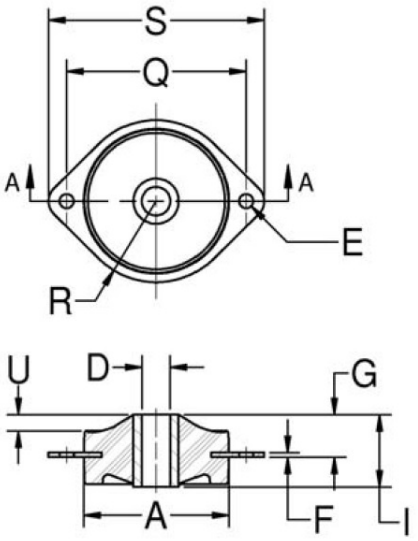

Lord Plateform Mounts provide effective isolation against vibration. The contour of the flexing element was developed to provide uniform stress distribution. This, plus high strength bonding and the use of specially compounded elastomers, provides maximum service life. These versatile mounts are available in three types, each type featuring square, diamond or holder configurations to suit a variety of design requirements. The three types, Plateform Mounts, Heavy-Duty Plateform Mounts and Multiplane Mounts, offer a range in load ratings from 0.5 to 600 pounds. Snubbing washers provide an interlocking system of metal parts which act to prevent damage from overload or excessive shock impact. Lord Plateform Mounts are easy to install and provide space efficiency. Typical applications include electronic equipment, business machines, medical equipment and small pumps, engines and gen sets. Non-Stock Item

RPM INDUSTRIAL RUBBER PARTS

Request for Quote | Contact Us

USA
4392 Broadway
Depew, NY 14043

Canada
2290 Industrial Street
Burlington, Ontario
L7P 1A1

888.842.5668
905.335.5523
info@rpmrubberparts.com

Spec Sheets

200PD-25 Plateform Mounts Diamond



Item # 200PD-25 Plateform Mounts Diamond
Manufacturer: Parker Lord Corporation

Specifications (Continued)

I (mm)	**25.4**
Inside Diameter (in)	**0.39**
K (in)	**3**
K (mm)	**76.2**
M (in)	**0.257**
M (mm)	**6.5**
Manufacturer	**Parker LORD**
Material	**Steel**
Max Axial Load Rating (lbs)	**25**
Max Axial Load Rating (Metric)	**111**
Max Axial Load Rating at 1/16 in (1.58 mm) Deflection (lbs)	**25**
Max Axial Rated Load at 1/16 in (1.58 mm) Deflection (Metric)	**111**
O (in)	**1.56**

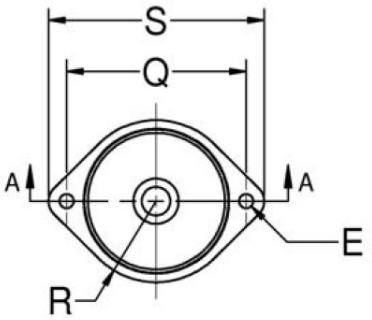

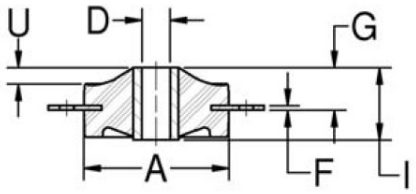

Lord Plateform Mounts provide effective isolation against vibration. The contour of the flexing element was developed to provide uniform stress distribution. This, plus high strength bonding and the use of specially compounded elastomers, provides maximum service life. These versatile mounts are available in three types, each type featuring square, diamond or holder configurations to suit a variety of design requirements. The three types, Plateform Mounts, Heavy-Duty Plateform Mounts and Multiplane Mounts, offer a range in load ratings from 0.5 to 600 pounds. Snubbing washers provide an interlocking system of metal parts which act to prevent damage from overload or excessive shock impact. Lord Plateform Mounts are easy to install and provide space efficiency. Typical applications include electronic equipment, business machines, medical equipment and small pumps, engines and gen sets. Non-Stock Item

RPM INDUSTRIAL RUBBER PARTS

Request for Quote

Contact Us

USA
4392 Broadway
Depew, NY 14043

Canada
2290 Industrial Street
Burlington, Ontario
L7P 1A1

888.842.5668
905.335.5523
info@rpmrubberparts.com

Spec Sheets

200PD-25 Plateform Mounts Diamond



Item # 200PD-25 Plateform Mounts Diamond
Manufacturer: Parker Lord Corporation

Specifications (Continued)

O (mm)	**39.6**
Outside Diameter (in)	**1.88**
Outside Diameter (mm)	**35.1**
P (in)	**0.032**
P (mm)	**0.8**
Q (in)	**2.475**
Q (mm)	**62.9**
R (in)	**1.12**
R (mm)	**28.4**
Recommended Steel Washer	**J-2049-3**
S (in)	**2.98**
S (mm)	**75.2**
Series	**200**

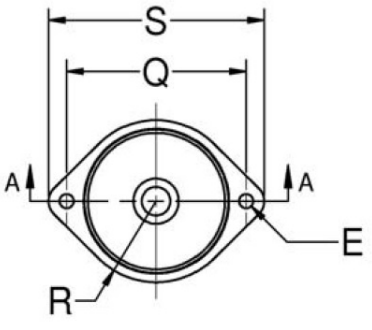

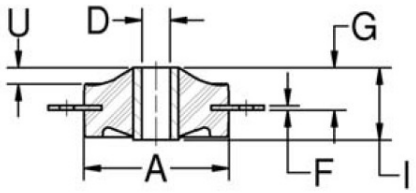

Lord Plateform Mounts provide effective isolation against vibration. The contour of the flexing element was developed to provide uniform stress distribution. This, plus high strength bonding and the use of specially compounded elastomers, provides maximum service life. These versatile mounts are available in three types, each type featuring square, diamond or holder configurations to suit a variety of design requirements. The three types, Plateform Mounts, Heavy-Duty Plateform Mounts and Multiplane Mounts, offer a range in load ratings from 0.5 to 600 pounds. Snubbing washers provide an interlocking system of metal parts which act to prevent damage from overload or excessive shock impact. Lord Plateform Mounts are easy to install and provide space efficiency. Typical applications include electronic equipment, business machines, medical equipment and small pumps, engines and gen sets. Non-Stock Item

RPM INDUSTRIAL RUBBER PARTS

Request for Quote

Contact Us

USA
4392 Broadway
Depew, NY 14043

Canada
2290 Industrial Street
Burlington, Ontario
L7P 1A1

888.842.5668
905.335.5523
info@rpmrubberparts.com

Spec Sheets

200PD-25 Plateform Mounts Diamond



Item # 200PD-25 Plateform Mounts Diamond
Manufacturer: Parker Lord Corporation

Specifications (Continued)

Thickness (in)	**0.06**
Thickness (Metric)	**1.5**
U (in)	**0.22**
U (mm)	**5.6**

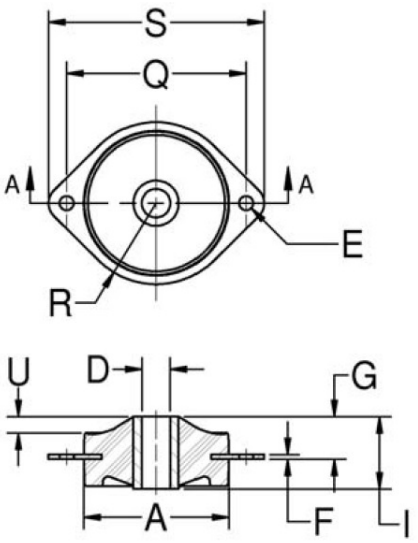

Lord Plateform Mounts provide effective isolation against vibration. The contour of the flexing element was developed to provide uniform stress distribution. This, plus high strength bonding and the use of specially compounded elastomers, provides maximum service life. These versatile mounts are available in three types, each type featuring square, diamond or holder configurations to suit a variety of design requirements. The three types, Plateform Mounts, Heavy-Duty Plateform Mounts and Multiplane Mounts, offer a range in load ratings from 0.5 to 600 pounds. Snubbing washers provide an interlocking system of metal parts which act to prevent damage from overload or excessive shock impact. Lord Plateform Mounts are easy to install and provide space efficiency. Typical applications include electronic equipment, business machines, medical equipment and small pumps, engines and gen sets. Non-Stock Item

RPM INDUSTRIAL RUBBER PARTS

Request for Quote

Contact Us

USA
4392 Broadway
Depew, NY 14043

Canada
2290 Industrial Street
Burlington, Ontario
L7P 1A1

888.842.5668
905.335.5523
info@rpmrubberparts.com