Spec Sheets

BS-10 CLEAR Hemispherical Bumpers



Item # BS-10 CLEAR Hemispherical Bumpers

Specifications

Color	**CLEAR**
Depth (in)	**0.394**
Height (in)	**0.118**

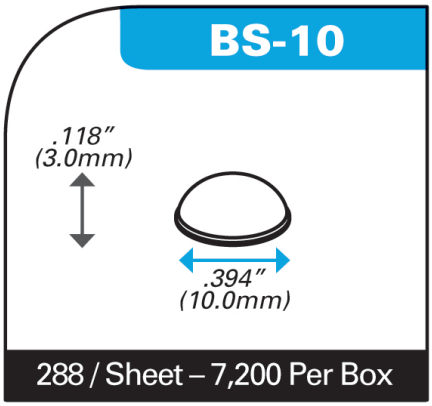

RPM INDUSTRIAL RUBBER PARTS

Request for Quote

Contact Us

USA
4392 Broadway
Depew, NY 14043

Canada
2290 Industrial Street
Burlington, Ontario
L7P 1A1

888.842.5668
905.335.5523
info@rpmrubberparts.com