Spec Sheets

BS-12 WHITE Hemispherical Bumpers



Item # BS-12 WHITE Hemispherical Bumpers

Specifications

Color	**WHITE**
Depth (in)	**0.375**
Height (in)	**0.15**

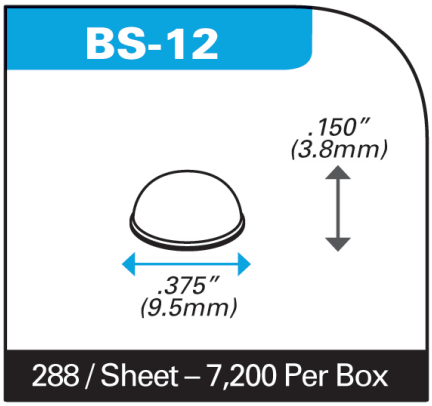

RPM INDUSTRIAL RUBBER PARTS

Request for Quote

Contact Us

USA
4392 Broadway
Depew, NY 14043

Canada
2290 Industrial Street
Burlington, Ontario
L7P 1A1

888.842.5668
905.335.5523
info@rpmrubberparts.com