Spec Sheets

BS-24 GREY Cylindrical Bumpers



Item # BS-24 GREY Cylindrical Bumpers

Specifications

Color	**GREY**
Depth (in)	**0.81**
Height (in)	**0.12**

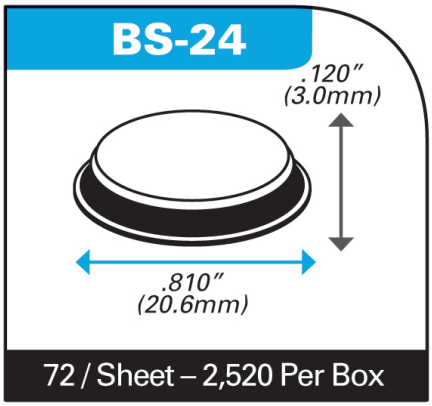

RPM INDUSTRIAL RUBBER PARTS

Request for Quote

Contact Us

USA
4392 Broadway
Depew, NY 14043

Canada
2290 Industrial Street
Burlington, Ontario
L7P 1A1

888.842.5668
905.335.5523
info@rpmrubberparts.com