Spec Sheets

CB-1120-1 Center Bonded Mounts Cb 1100 Series

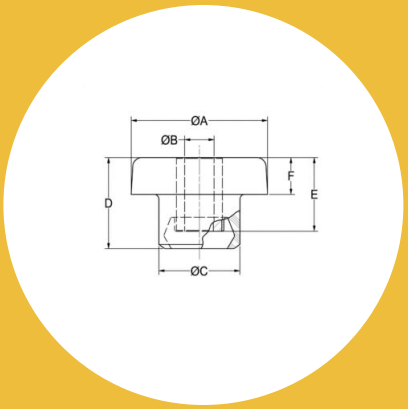

Item # CB-1120-1 Center Bonded Mounts Cb 1100 Series
Manufacturer: Parker Lord Corporation

Specifications

A (in)	**1.09**
Application Engineering Assistance	**Frequently vibration isolation problems require a system engineering analysis. Lord has the computer capability as well as specialized programs for analyzing engine/ transmission combinations.**
B (in)	**0.4**
C (in)	**0.81**
D (in)	**1.02**
E (in)	**0.62**
F (in)	**0.22**
ID (in)	**0.4**
ID (mm)	**10.2**
Manufacturer	**Parker LORD**
Max Axial Deflection (in)	**0.025**
Max Axial Deflection (Metric)	**0.64**
Max Axial Static Load Rating (lbs at in)	**75**

Installation View

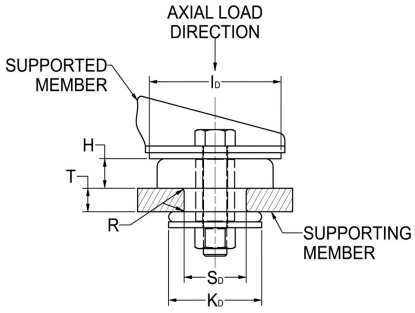

- Center Bonded Mounts isolate vibration, control shock and reduce noise due to structure borne vibrations. Available in a full range of rated load capacities and able to withstand shock loads of 10 g's, these mounts effectively protect equipment and improve operator comfort. They are ideal for automotive, marine, railroad and industrial markets.

Center Bonded Mounts provide flexible suspension systems for mobile, transport-mounted or portable equipment. Typical applications include engines, cabs, fuel tanks, pumps, air conditioning units, compressors and industrial machinery. In applications where the mounts will be immersed in oil, parts made in oil-resistant elastomer are available.

RPM INDUSTRIAL RUBBER PARTS

Request for Quote | Contact Us

USA
4392 Broadway
Depew, NY 14043

Canada
2290 Industrial Street
Burlington, Ontario
L7P 1A1

888.842.5668
905.335.5523
info@rpmrubberparts.com

Spec Sheets

CB-1120-1 Center Bonded Mounts Cb 1100 Series

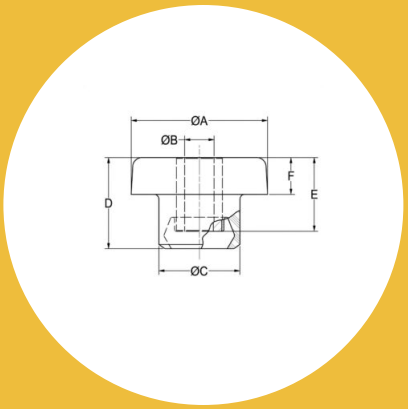

Item # CB-1120-1 Center Bonded Mounts Cb 1100 Series
Manufacturer: Parker Lord Corporation

Specifications (Continued)

Max Axial Static Load at Deflection (Metric)	**330**
Min Diameter ID (in)	**1.25**
Min Diameter (C) (Imperial)	**31.8**
Min Diameter KD (in)	**1.12**
Min Diameter KD (mm)	**28.5**
Nominal Dynamic Static Spring Rate Ratio	**1.08**
OD (E) (mm)	**28.4**
OD (in)	**1.12**
OD (mm)	**28.4**
R (in)	**0.06**
R (mm)	**1.5**
Recommended Bolt Grade or Class (SAE J1199)	**5.8**
Recommended Bolt Grade or Class (SAE J429)	**2**

Installation View

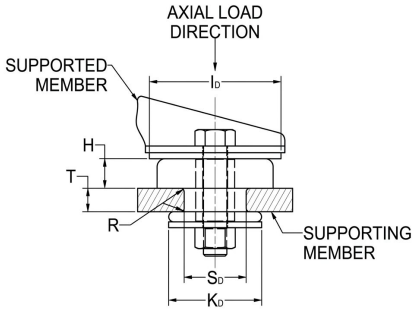

- Center Bonded Mounts isolate vibration, control shock and reduce noise due to structure borne vibrations. Available in a full range of rated load capacities and able to withstand shock loads of 10 g's, these mounts effectively protect equipment and improve operator comfort. They are ideal for automotive, marine, railroad and industrial markets.

Center Bonded Mounts provide flexible suspension systems for mobile, transport-mounted or portable equipment. Typical applications include engines, cabs, fuel tanks, pumps, air conditioning units, compressors and industrial machinery. In applications where the mounts will be immersed in oil, parts made in oil-resistant elastomer are available.

RPM INDUSTRIAL RUBBER PARTS

Request for Quote | Contact Us

USA
4392 Broadway
Depew, NY 14043

Canada
2290 Industrial Street
Burlington, Ontario
L7P 1A1

888.842.5668
905.335.5523
info@rpmrubberparts.com

Spec Sheets

CB-1120-1 Center Bonded Mounts Cb 1100 Series

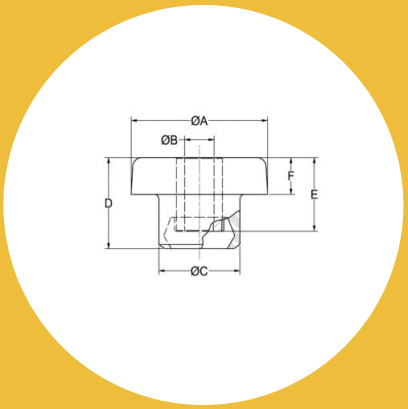

Item # CB-1120-1 Center Bonded Mounts Cb 1100 Series
Manufacturer: Parker Lord Corporation

Specifications (Continued)

Recommended Bolt Size (in)	**3/8**
Recommended Steel Washer	**(Head Washer J-2049-62)(Tail Washer J-2049-61)**
SD (in)	**0.75**
SD (mm)	**19.1**
Series	**CB-1100**
T (in)	**0.31**
T (mm)	**7.9**
Thickness (in)	**0.125**
Thickness (Metric)	**3.2**

Installation View

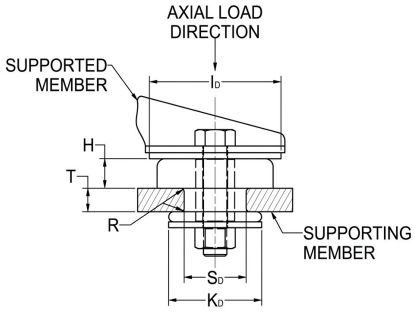

- Center Bonded Mounts isolate vibration, control shock and reduce noise due to structure borne vibrations. Available in a full range of rated load capacities and able to withstand shock loads of 10 g's, these mounts effectively protect equipment and improve operator comfort. They are ideal for automotive, marine, railroad and industrial markets.

Center Bonded Mounts provide flexible suspension systems for mobile, transport-mounted or portable equipment. Typical applications include engines, cabs, fuel tanks, pumps, air conditioning units, compressors and industrial machinery. In applications where the mounts will be immersed in oil, parts made in oil-resistant elastomer are available.

RPM INDUSTRIAL RUBBER PARTS

Request for Quote | Contact Us

USA
4392 Broadway
Depew, NY 14043

Canada
2290 Industrial Street
Burlington, Ontario
L7P 1A1

888.842.5668
905.335.5523
info@rpmrubberparts.com