Spec Sheets

CBA20-300-50 Center Bonded Mounts Cba 50 Series

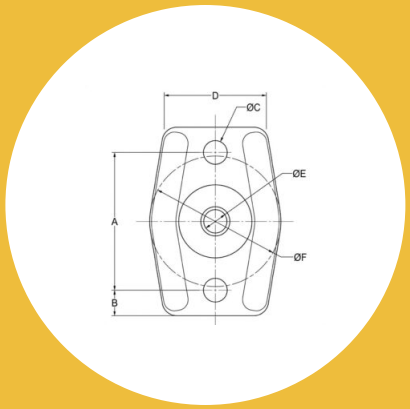

Item # CBA20-300-50 Center Bonded Mounts Cba 50 Series
Manufacturer: Parker Lord Corporation

Specifications

A (in)	**3.75**
Applicable Metal Bracket	**Y-30266-4-1**
Application Engineering Assistance	**Frequently vibration isolation problems require a system engineering analysis. Lord has the computer capability as well as specialized programs for analyzing engine/ transmission combinations. The**
Axial Static Spring Rate (lbs/in)	**2500**
Axial Static Spring Rate (Metric)	**438**
B (in)	**1/2**
D (in)	**2.25**
F (in)	**3**
F (mm)	**76.2**
I (in)	**2**
I (mm)	**50.8**
ID (in)	**0.53**
ID (mm)	**13.5**

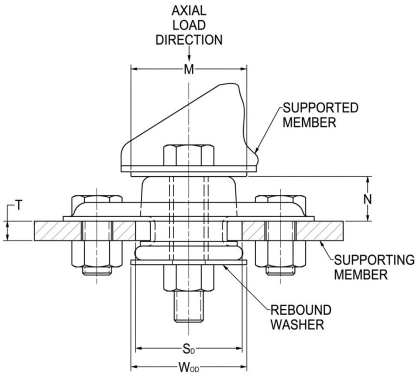

Center Bonded Mounts isolate vibration, control shock and reduce noise due to structure borne vibrations. Available in a full range of rated load capacities and able to withstand shock loads of 10 g's, these mounts effectively protect equipment and improve operator comfort. They are ideal for automotive, marine, railroad and industrial markets.
Center Bonded Mounts provide flexible suspension systems for mobile, transport-mounted or portable equipment. Typical applications include engines, cabs, fuel tanks, pumps, air conditioning units, compressors and industrial machinery.
Mount & Washer only furnished by Lord.

RPM INDUSTRIAL RUBBER PARTS

Request for Quote

Contact Us

USA
4392 Broadway
Depew, NY 14043

Canada
2290 Industrial Street
Burlington, Ontario
L7P 1A1

888.842.5668
905.335.5523
info@rpmrubberparts.com

Spec Sheets

CBA20-300-50 Center Bonded Mounts Cba 50 Series

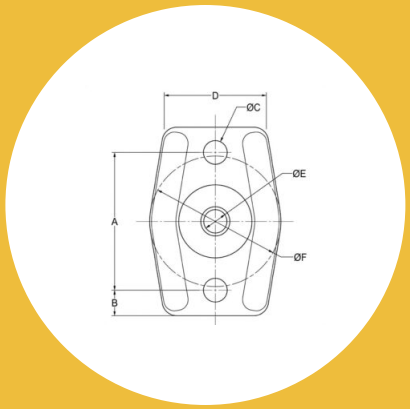

Item # CBA20-300-50 Center Bonded Mounts Cba 50 Series
Manufacturer: Parker Lord Corporation

Specifications (Continued)

J (in)	**1.45**
J (mm)	**36.8**
K (in)	**1.92**
K (mm)	**48.8**
Manufacturer	**Parker LORD**
Material	**Low Carbon Steel**
Max Axial Static Load at Deflection (lbs)	**300 at 0.12**
Max Axial Static Load Rating (lbs at in)	**300 at 0.12**
Max Axial Static Load Rating (Metric)	**1334 at 3.0**
Max Diameter (C) (in)	**0.412**
Max Diameter (C) (Metric)	**10.5**
Max ID (E) (in)	**13.7**
Max ID (E) (mm)	**13.7**

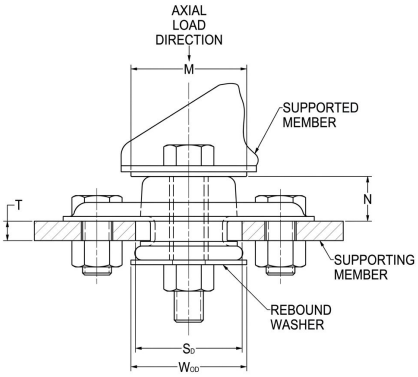

Center Bonded Mounts isolate vibration, control shock and reduce noise due to structure borne vibrations. Available in a full range of rated load capacities and able to withstand shock loads of 10 g's, these mounts effectively protect equipment and improve operator comfort. They are ideal for automotive, marine, railroad and industrial markets.
Center Bonded Mounts provide flexible suspension systems for mobile, transport-mounted or portable equipment. Typical applications include engines, cabs, fuel tanks, pumps, air conditioning units, compressors and industrial machinery.
Mount & Washer only furnished by Lord.

RPM INDUSTRIAL RUBBER PARTS

Request for Quote

Contact Us

USA
4392 Broadway
Depew, NY 14043

Canada
2290 Industrial Street
Burlington, Ontario
L7P 1A1

888.842.5668
905.335.5523
info@rpmrubberparts.com

Spec Sheets

CBA20-300-50 Center Bonded Mounts Cba 50 Series

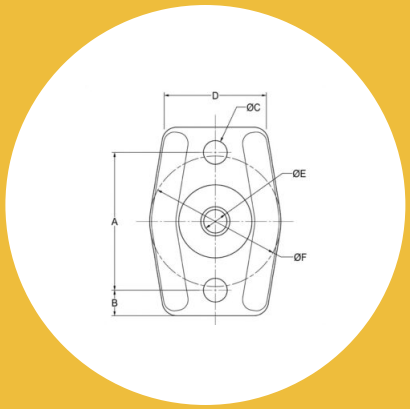

Item # CBA20-300-50 Center Bonded Mounts Cba 50 Series
Manufacturer: Parker Lord Corporation

Specifications (Continued)

Max T (Imperial)	**0.38**
Max T (Metric)	**9.7**
Min Diameter (C) (mm)	**10.3**
Min ID (E) (in)	**0.525**
Min ID (E) (mm)	**13.3**
Min M (Imperial)	**2.38**
Min M (Metric)	**60.5**
Min T (Imperial)	**0.25**
Min T (Metric)	**6.4**
N (in)	**0.79**
N (mm)	**20.1**
OD (E) (in)	**0.75**
Radial Static Spring Rate (lbs/in)	**3500**

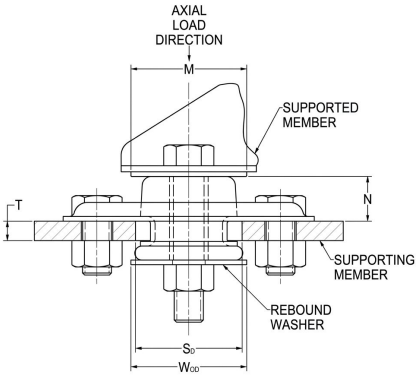

Center Bonded Mounts isolate vibration, control shock and reduce noise due to structure borne vibrations. Available in a full range of rated load capacities and able to withstand shock loads of 10 g's, these mounts effectively protect equipment and improve operator comfort. They are ideal for automotive, marine, railroad and industrial markets.
Center Bonded Mounts provide flexible suspension systems for mobile, transport-mounted or portable equipment. Typical applications include engines, cabs, fuel tanks, pumps, air conditioning units, compressors and industrial machinery.
Mount & Washer only furnished by Lord.

RPM INDUSTRIAL RUBBER PARTS

Request for Quote

Contact Us

USA
4392 Broadway
Depew, NY 14043

Canada
2290 Industrial Street
Burlington, Ontario
L7P 1A1

888.842.5668
905.335.5523
info@rpmrubberparts.com

Spec Sheets

CBA20-300-50 Center Bonded Mounts Cba 50 Series

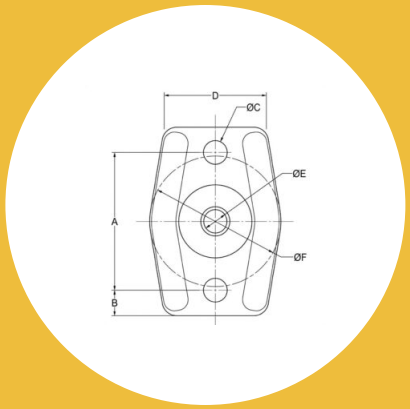

Item # CBA20-300-50 Center Bonded Mounts Cba 50 Series
Manufacturer: Parker Lord Corporation

Specifications (Continued)

Radial Static Spring Rate (Metric)	**613**
Recommended Steel Washer	**J-2049-52**
SD (in)	**2**
SD (mm)	**50.8**
Series	**CBA-50**
Thickness (in)	**0.125**
Thickness (Metric)	**3.2**

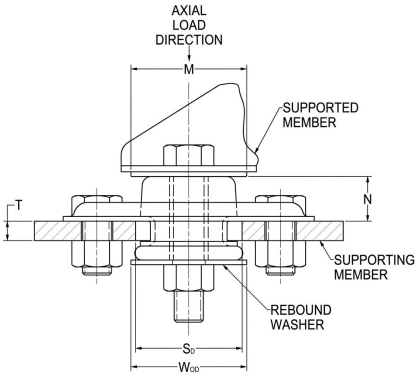

Center Bonded Mounts isolate vibration, control shock and reduce noise due to structure borne vibrations. Available in a full range of rated load capacities and able to withstand shock loads of 10 g's, these mounts effectively protect equipment and improve operator comfort. They are ideal for automotive, marine, railroad and industrial markets.
Center Bonded Mounts provide flexible suspension systems for mobile, transport-mounted or portable equipment. Typical applications include engines, cabs, fuel tanks, pumps, air conditioning units, compressors and industrial machinery.
Mount & Washer only furnished by Lord.

RPM INDUSTRIAL RUBBER PARTS

Request for Quote

Contact Us

USA
4392 Broadway
Depew, NY 14043

Canada
2290 Industrial Street
Burlington, Ontario
L7P 1A1

888.842.5668
905.335.5523
info@rpmrubberparts.com