Spec Sheets

HYD01-500-60 Hydro Mount



Item # HYD01-500-60 Hydro Mount
Manufacturer: RPM Mechanical

Specifications

Number of Mounting Holes	2
A (mm)	132
B1 (mm)	99
B2 (mm)	109
C (Thread Size)	M12
E (mm)	63
F (mm)	96
G (mm)	45
H (mm)	60
I (mm)	5
J (mm)	90
K (mm)	11
Max Load (kg)	220

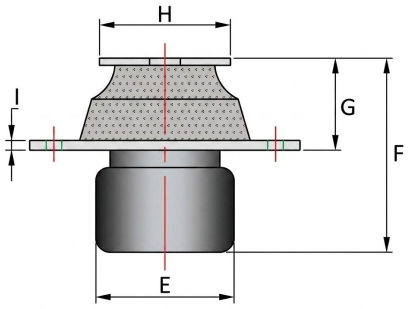

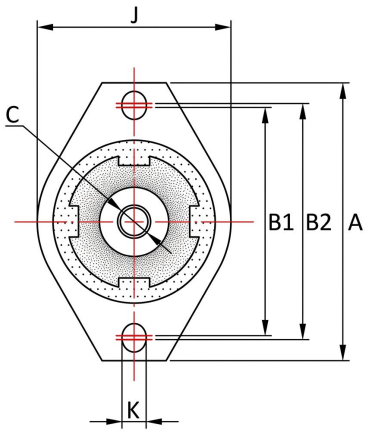

RPM INDUSTRIAL RUBBER PARTS

Request for Quote

Contact Us

USA
4392 Broadway
Depew, NY 14043

Canada
2290 Industrial Street
Burlington, Ontario
L7P 1A1

888.842.5668
905.335.5523
info@rpmrubberparts.com