Spec Sheets

HYDSQ01-550-50 Hydro Mount



Item # HYDSQ01-550-50 Hydro Mount
Manufacturer: RPM Mechanical

Specifications

Number of Mounting Holes	2
A (mm)	132
B1 (mm)	99
B2 (mm)	109
L1 (mm)	79.5
L2 (mm)	82.5
C (Thread Size)	M12
E (mm)	63
F (mm)	96
G (mm)	45
H (mm)	75
I (mm)	5
J (mm)	90

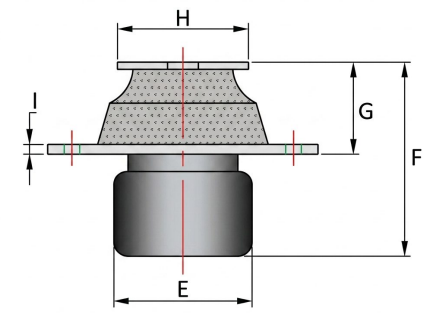

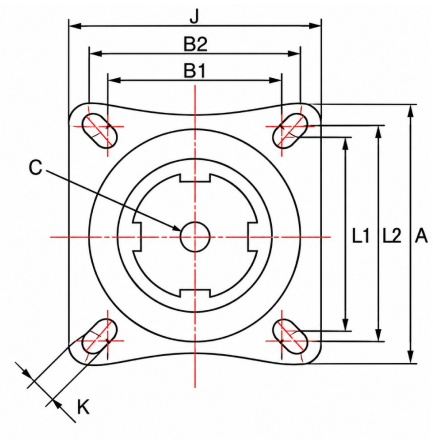

RPM INDUSTRIAL RUBBER PARTS

Request for Quote | Contact Us

USA
4392 Broadway
Depew, NY 14043

Canada
2290 Industrial Street
Burlington, Ontario
L7P 1A1

888.842.5668
905.335.5523
info@rpmrubberparts.com

Spec Sheets

HYDSQ01-550-50 Hydro Mount



Item # HYDSQ01-550-50 Hydro Mount
Manufacturer: RPM Mechanical

Specifications (Continued)

K (mm)	11
Max Load (kg)	175

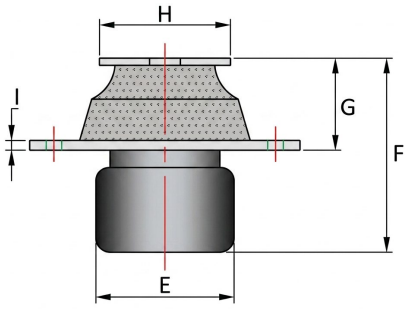

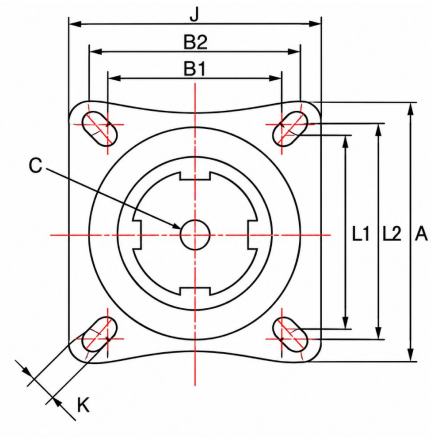

RPM INDUSTRIAL RUBBER PARTS

Request for Quote

Contact Us

USA
4392 Broadway
Depew, NY 14043

Canada
2290 Industrial Street
Burlington, Ontario
L7P 1A1

888.842.5668
905.335.5523
info@rpmrubberparts.com