Spec Sheets

HYDSQ03-200-60 Hydro Mount



Item # HYDSQ03-200-60 Hydro Mount
Manufacturer: RPM Mechanical

Specifications

Number of Mounting Holes	2
A (mm)	175
B1 (mm)	130
B2 (mm)	145
L1 (mm)	110
L2 (mm)	110
C (Thread Size)	M20
E (mm)	90
F (mm)	115
G (mm)	53
H (mm)	80
I (mm)	8
J (mm)	105

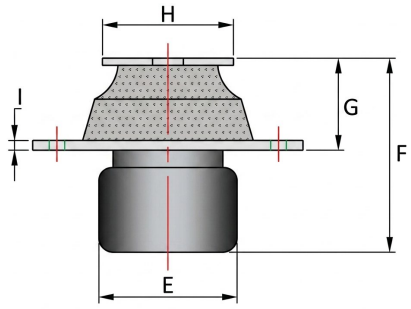

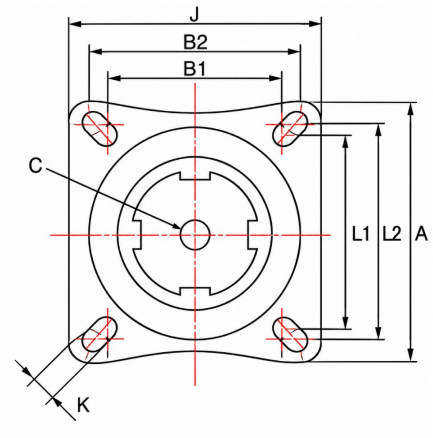

INDUSTRIAL RUBBER PARTS

Request for Quote

Contact Us

USA
4392 Broadway
Depew, NY 14043

Canada
2290 Industrial Street
Burlington, Ontario
L7P 1A1

888.842.5668
905.335.5523
info@rpmrubberparts.com

Spec Sheets

HYDSQ03-200-60 Hydro Mount



Item # HYDSQ03-200-60 Hydro Mount
Manufacturer: RPM Mechanical

Specifications (Continued)

K (mm)	12
Max Load (kg)	350

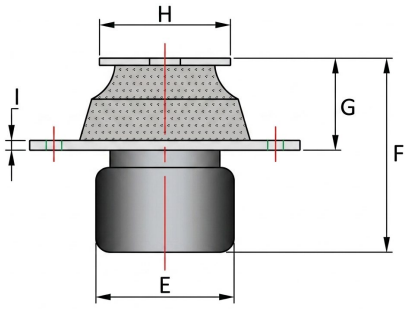

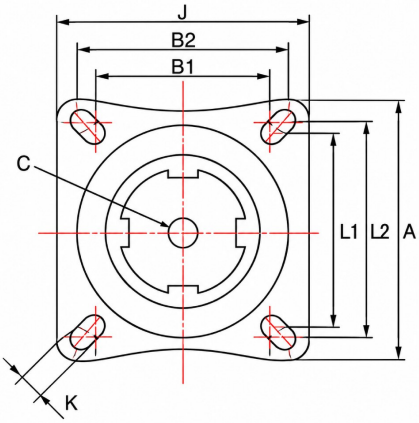

RPM INDUSTRIAL RUBBER PARTS

Request for Quote | Contact Us

USA
4392 Broadway
Depew, NY 14043

Canada
2290 Industrial Street
Burlington, Ontario
L7P 1A1

888.842.5668
905.335.5523
info@rpmrubberparts.com