Spec Sheets

J-14056-4 Large Shear Mounts



Item # J-14056-4 Large Shear Mounts
Manufacturer: Parker Lord Corporation

Specifications

A (in)	7.12
B (in)	7.12
C (in)	5.75
Compression Spring Rate Kc (Imperial)	5100
Compression Spring Rate Kc (Metric)	893
Compression Static Load (lbs)	3670
Compression Static Load (Metric)	16325
D (in)	5.75
E (in)	0.51
Elastomer	Natural Rubber
F (in)	4
F (mm)	101.6
Flange Thickness (in)	0.19

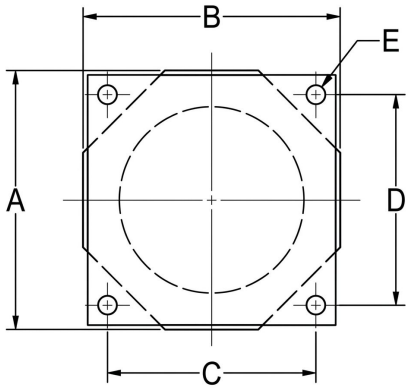

RPM INDUSTRIAL RUBBER PARTS

Request for Quote

Contact Us

USA
4392 Broadway
Depew, NY 14043

Canada
2290 Industrial Street
Burlington, Ontario
L7P 1A1

888.842.5668
905.335.5523
info@rpmrubberparts.com

Spec Sheets

J-14056-4 Large Shear Mounts



Item # J-14056-4 Large Shear Mounts
Manufacturer: Parker Lord Corporation

Specifications (Continued)

Flange Thickness (mm)	**4.8**
G (in)	**5.5**
G (mm)	**139.7**
Grade per SAE J429	**2**
Manufacturer	**Parker LORD**
Shear Spring Rate Ks (lbs/in)	**850**
Shear Spring Rate Ks (Metric)	**149**
Shear Static Load (lbs)	**770**
Shear Static Load (Metric)	**3425**
Types	**5L**

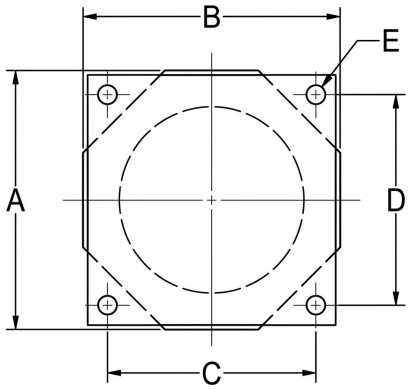

RPM INDUSTRIAL RUBBER PARTS

Request for Quote

Contact Us

USA
4392 Broadway
Depew, NY 14043

Canada
2290 Industrial Street
Burlington, Ontario
L7P 1A1

888.842.5668
905.335.5523
info@rpmrubberparts.com