Spec Sheets

# J-21100-10 Conical Mounts



**Item #** J-21100-10 Conical Mounts
**Manufacturer:** Parker Lord Corporation

## Specifications

| | |
|---|---|
| **Axial Dynamic Stiffness (lbs/in)** | **4140** |
| **Axial Dynamic Stiffness (Metric)** | **590** |
| **Axial Static Stiffness (Imperial)** | **3370** |
| **Axial Static Stiffness (Metric)** | **590** |
| **Manufacturer** | **Parker LORD** |
| **Max Axial Deflection (in)** | **0.2** |
| **Max Axial Deflection (Metric)** | **5** |
| **Max Axial Load Rating (lbs)** | **1040** |
| **Max Axial Load Rating (Metric)** | **4.6** |
| **Radial (R?) Static Stiffness (lbs/in)** | **13700** |
| **Radial (R?) Static Stiffness (Metric)** | **2400** |
| **Rated (R?) Static Stiffness (Imperial)** | **13700** |
| **Rated (R?) Static Stiffness (Metric)** | **2400** |

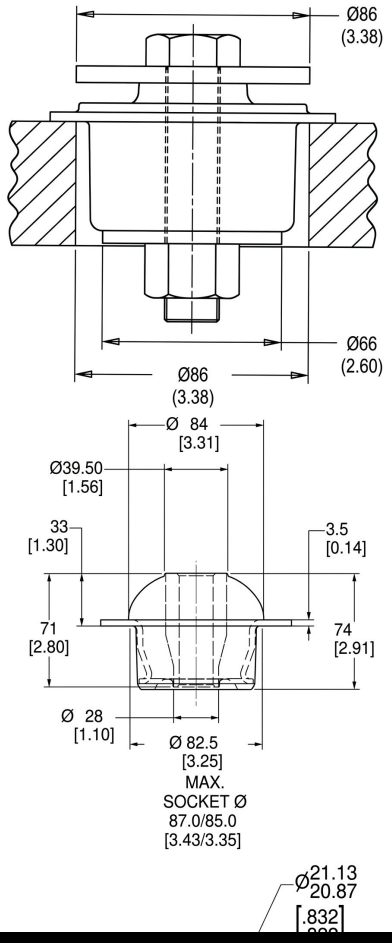


RPM INDUSTRIAL RUBBER PARTS

Request for Quote | Contact Us

**USA**
4392 Broadway
Depew, NY 14043

**Canada**
2290 Industrial Street
Burlington, Ontario
L7P 1A1

888.842.5668
905.335.5523
info@rpmrubberparts.com

RPM INDUSTRIAL RUBBER PARTS

Request for Quote

Contact Us

**USA**
4392 Broadway
Depew, NY 14043

**Canada**
2290 Industrial Street
Burlington, Ontario
L7P 1A1

888.842.5668
905.335.5523
info@rpmrubberparts.com

Spec Sheets

# J-21100-10 Conical Mounts



**Item #** J-21100-10 Conical Mounts
**Manufacturer:** Parker Lord Corporation

## Specifications (Continued)

| | |
|---|---|
| **Rated Axial Static Deflection (in)** | **0.2** |
| **Rated Axial Static Deflection (Metric)** | **5** |
| **Rated Axial Static Load (lbs)** | **1040** |
| **Rated Axial Static Load (Metric)** | **4.6** |
| **Recommended Bolt Size (in)** | **3/4** |

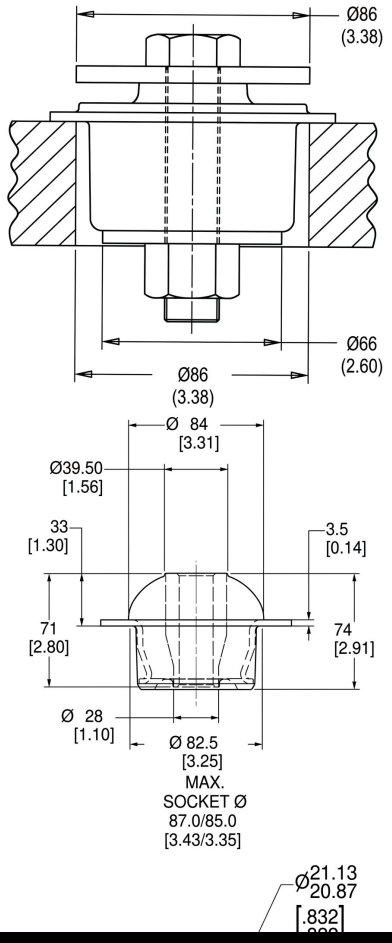


RPM INDUSTRIAL RUBBER PARTS

Request for Quote | Contact Us

**USA**
4392 Broadway
Depew, NY 14043

**Canada**
2290 Industrial Street
Burlington, Ontario
L7P 1A1

888.842.5668
905.335.5523
info@rpmrubberparts.com

RPM INDUSTRIAL RUBBER PARTS

Request for Quote

Contact Us

**USA**
4392 Broadway
Depew, NY 14043

**Canada**
2290 Industrial Street
Burlington, Ontario
L7P 1A1

888.842.5668
905.335.5523
info@rpmrubberparts.com