Spec Sheets

J-21103-1 Conical Mounts



Item # J-21103-1 Conical Mounts
Manufacturer: Parker Lord Corporation

Specifications

Axial Dynamic Stiffness (lbs/in)	915
Axial Dynamic Stiffness (Metric)	150
Axial Static Stiffness (Imperial)	860
Axial Static Stiffness (Metric)	150
Manufacturer	Parker LORD
Max Axial Deflection (in)	0.2
Max Axial Deflection (Metric)	5
Max Axial Load Rating (lbs)	250
Max Axial Load Rating (Metric)	1.1
Radial (R?) Static Stiffness (lbs/in)	4855
Radial (R?) Static Stiffness (Metric)	850
Rated (R?) Static Stiffness (Imperial)	2285
Rated (R?) Static Stiffness (Metric)	400

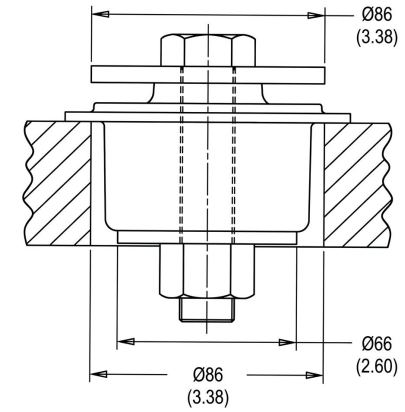

RPM INDUSTRIAL RUBBER PARTS

Request for Quote | Contact Us

USA
4392 Broadway
Depew, NY 14043

Canada
2290 Industrial Street
Burlington, Ontario
L7P 1A1

888.842.5668
905.335.5523
info@rpmrubberparts.com

Spec Sheets

J-21103-1 Conical Mounts



Item # J-21103-1 Conical Mounts
Manufacturer: Parker Lord Corporation

Specifications (Continued)

Rated Axial Static Deflection (in)	**0.2**
Rated Axial Static Deflection (Metric)	**5**
Rated Axial Static Load (lbs)	**250**
Rated Axial Static Load (Metric)	**1.1**
Recommended Bolt Size (in)	**3/4**

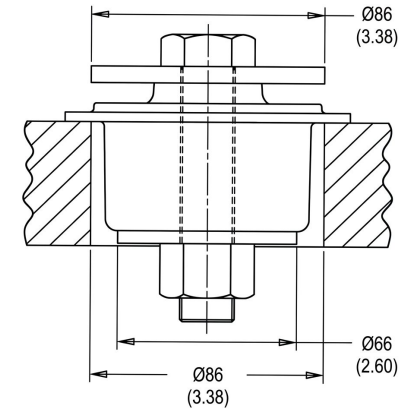

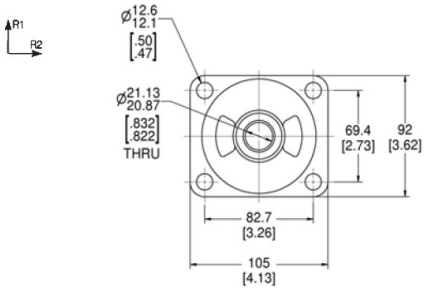

RPM INDUSTRIAL RUBBER PARTS

Request for Quote | Contact Us

USA
4392 Broadway
Depew, NY 14043

Canada
2290 Industrial Street
Burlington, Ontario
L7P 1A1

888.842.5668
905.335.5523
info@rpmrubberparts.com