Spec Sheets

J-21104-1 Conical Mounts



Item # J-21104-1 Conical Mounts
Manufacturer: Parker Lord Corporation

Specifications

Axial Dynamic Stiffness (lbs/in)	**685**
Axial Dynamic Stiffness (Metric)	**110**
Axial Static Stiffness (Imperial)	**630**
Axial Static Stiffness (Metric)	**110**
Manufacturer	**Parker LORD**
Max Axial Deflection (in)	**0.2**
Max Axial Deflection (Metric)	**5**
Max Axial Load Rating (lbs)	**185**
Max Axial Load Rating (Metric)	**0.82**
Radial (R?) Static Stiffness (lbs/in)	**3430**
Radial (R?) Static Stiffness (Metric)	**600**
Rated (R?) Static Stiffness (Imperial)	**1720**
Rated (R?) Static Stiffness (Metric)	**300**

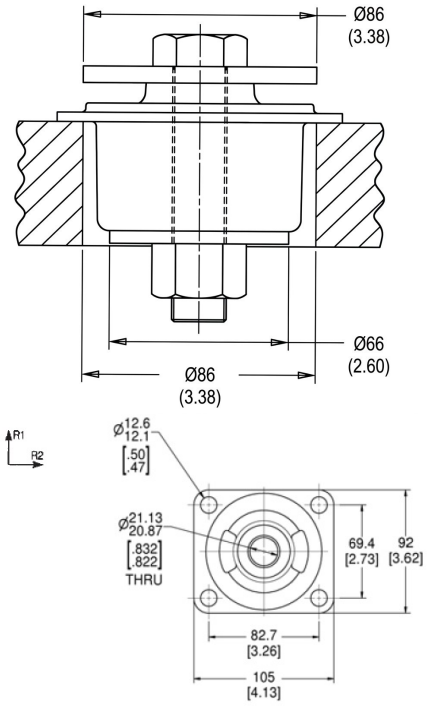

RPM INDUSTRIAL RUBBER PARTS

Request for Quote | Contact Us

USA
4392 Broadway
Depew, NY 14043

Canada
2290 Industrial Street
Burlington, Ontario
L7P 1A1

888.842.5668
905.335.5523
info@rpmrubberparts.com

Spec Sheets

J-21104-1 Conical Mounts



Item # J-21104-1 Conical Mounts
Manufacturer: Parker Lord Corporation

Specifications (Continued)

Rated Axial Static Deflection (in)	**0.2**
Rated Axial Static Deflection (Metric)	**5**
Rated Axial Static Load (lbs)	**185**
Rated Axial Static Load (Metric)	**0.82**
Recommended Bolt Size (in)	**3/4**

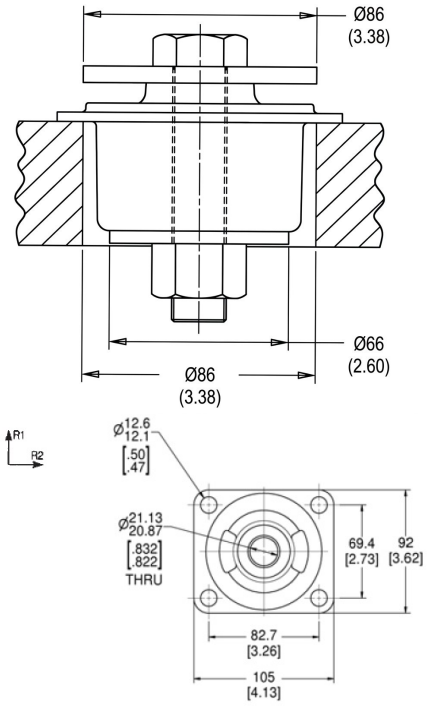

RPM INDUSTRIAL RUBBER PARTS

Request for Quote | Contact Us

USA
4392 Broadway
Depew, NY 14043

Canada
2290 Industrial Street
Burlington, Ontario
L7P 1A1

888.842.5668
905.335.5523
info@rpmrubberparts.com