Spec Sheets

J-21159-7 Conical Mounts



Item # J-21159-7 Conical Mounts
Manufacturer: Parker Lord Corporation

Specifications

Axial Dynamic Stiffness (lbs/in)	5655
Axial Dynamic Stiffness (Metric)	740
Axial Static Stiffness (Imperial)	4230
Axial Static Stiffness (Metric)	740
Manufacturer	Parker LORD
Max Axial Deflection (in)	0.3
Max Axial Deflection (Metric)	7.6
Max Axial Load Rating (lbs)	1400
Max Axial Load Rating (Metric)	6230
Radial (R?) Static Stiffness (lbs/in)	15100
Radial (R?) Static Stiffness (Metric)	2645
Rated (R?) Static Stiffness (Imperial)	15100
Rated (R?) Static Stiffness (Metric)	2645

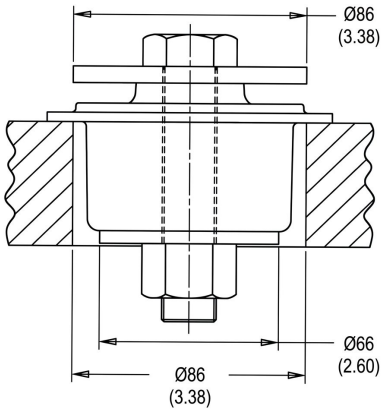

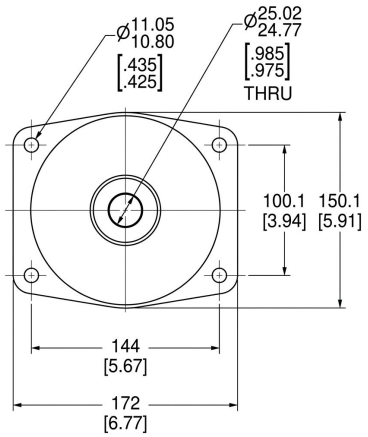

RPM INDUSTRIAL RUBBER PARTS

Request for Quote

Contact Us

USA
4392 Broadway
Depew, NY 14043

Canada
2290 Industrial Street
Burlington, Ontario
L7P 1A1

888.842.5668
905.335.5523
info@rpmrubberparts.com

Spec Sheets

J-21159-7 Conical Mounts



Item # J-21159-7 Conical Mounts
Manufacturer: Parker Lord Corporation

Specifications (Continued)

Rated Axial Static Deflection (in)	**0.3**
Rated Axial Static Deflection (Metric)	**7.6**
Rated Axial Static Load (lbs)	**1400**
Rated Axial Static Load (Metric)	**6230**
Recommended Bolt Size (in)	**7/8**

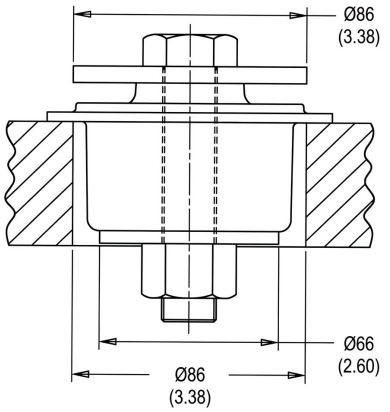

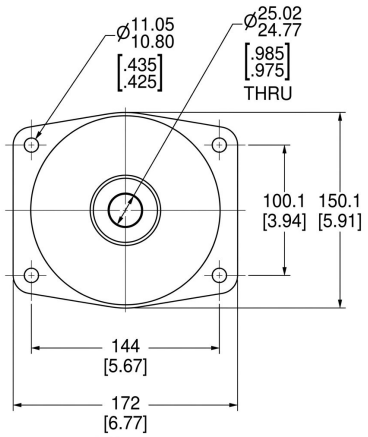

RPM INDUSTRIAL RUBBER PARTS

Request for Quote

Contact Us

USA
4392 Broadway
Depew, NY 14043

Canada
2290 Industrial Street
Burlington, Ontario
L7P 1A1

888.842.5668
905.335.5523
info@rpmrubberparts.com