Spec Sheets

J-2927-4-2 Grommet Isolators Standard



Item # J-2927-4-2 Grommet Isolators Standard

Specifications

Axial Static Spring Rate (lbs/in)	**32**
Axial Static Spring Rate (Metric)	**5.6**
Depth (in)	**0.555**
Elastomer	**Neoprene Oil Resistant**
Ferrule Part Number	**Y-4045-B**
Figure	**9**
Max Axial Load Rating (lbs)	**2**
Max Axial Load Rating (Metric)	**9**
Radial Static Spring Rate (lbs/in)	**32**
Radial Static Spring Rate (Metric)	**5.6**
Support Member Plate Diameter (in)	**0.555**
Support Member Plate Diameter (mm)	**14.1**
Support Member Plate Thickness (in)	**0.062**

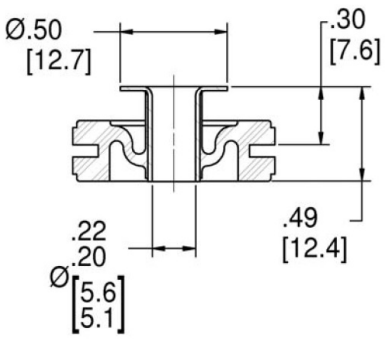

Lord Grommet Isolators provide effective, economical vibration isolation for light loads. They are suitable for commercial and military applications including computers, disk drives, business machines, precision instrumentation and general industrial equipment.
Lord Grommet Isolators are designed and produced with the same kind of precision and care as our high performance bonded elastomeric mounts. This provides close control of stiffness and dimensions. You get the performance and quality you need at low cost.
Standard Grommet Isolators are made of neoprene and natural rubber. They provide good vibration isolation for disturbing frequencies above 30 Hz.
Damped Grommet Isolators are made of SPE®/D Elastomer. They are well suited to applications which involve limited sway space.
Not recommended for Radial Static Load.

RPM INDUSTRIAL RUBBER PARTS

Request for Quote | Contact Us

USA
4392 Broadway
Depew, NY 14043

Canada
2290 Industrial Street
Burlington, Ontario
L7P 1A1

888.842.5668
905.335.5523
info@rpmrubberparts.com

Spec Sheets

J-2927-4-2 Grommet Isolators Standard



Item # J-2927-4-2 Grommet Isolators Standard

Specifications (Continued)

Support Member Plate Thickness (mm)	**1.6**
Thickness (in)	**0.062**
Thickness (Metric)	**1.6**
Thread Size	**#10 Screw**

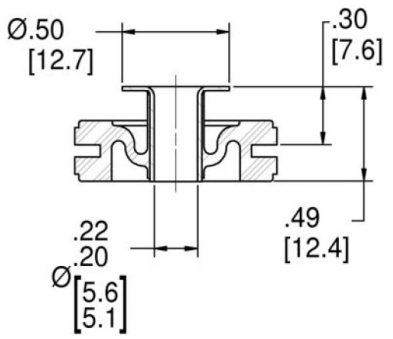

Lord Grommet Isolators provide effective, economical vibration isolation for light loads. They are suitable for commercial and military applications including computers, disk drives, business machines, precision instrumentation and general industrial equipment.
Lord Grommet Isolators are designed and produced with the same kind of precision and care as our high performance bonded elastomeric mounts. This provides close control of stiffness and dimensions. You get the performance and quality you need at low cost.
Standard Grommet Isolators are made of neoprene and natural rubber. They provide good vibration isolation for disturbing frequencies above 30 Hz.
Damped Grommet Isolators are made of SPE®/D Elastomer. They are well suited to applications which involve limited sway space.
Not recommended for Radial Static Load.

RPM INDUSTRIAL RUBBER PARTS

Request for Quote

Contact Us

USA
4392 Broadway
Depew, NY 14043

Canada
2290 Industrial Street
Burlington, Ontario
L7P 1A1

888.842.5668
905.335.5523
info@rpmrubberparts.com