Spec Sheets

J-4624-2 Sandwich Mounts Unc Thread Type 3

Item # J-4624-2 Sandwich Mounts Unc Thread Type 3
Manufacturer: Lord Corporation

Specifications

A (in)	**1**
C (in)	**0.69**
Compression Spring Rate Kc (Imperial)	**750**
Compression Spring Rate Kc (Metric)	**131**
Compression Static Load (lbs)	**90**
Compression Static Load (Metric)	**400**
D (in)	**0.38**
Durometer	**43**
Elastomer	**Oil Resistant Elastomer - Neoprene**
Grade per SAE J429	**1**
Manufacturer	**Parker LORD**
Thread Size	**1/4-20 UNC**
Thread Type	**Standard UNC**

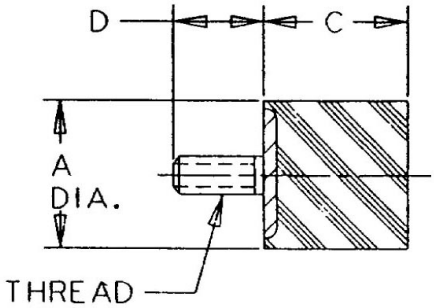

Flex-Bolt® Sandwich Mounts are Manufactured by LORD Corporation.

RPM INDUSTRIAL RUBBER PARTS

Request for Quote

Contact Us

USA
4392 Broadway
Depew, NY 14043

Canada
2290 Industrial Street
Burlington, Ontario
L7P 1A1

888.842.5668
905.335.5523
info@rpmrubberparts.com

Spec Sheets

J-4624-2 Sandwich Mounts Unc Thread Type 3

Item # J-4624-2 Sandwich Mounts Unc Thread Type 3
Manufacturer: Lord Corporation

Specifications (Continued)

Types	**3**

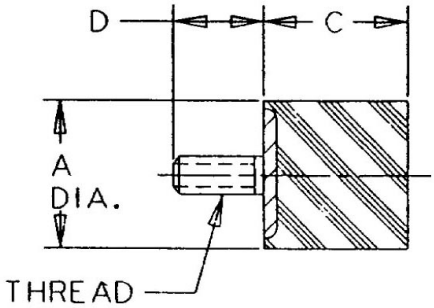

Flex-Bolt® Sandwich Mounts are Manufactured by LORD Corporation.

RPM INDUSTRIAL RUBBER PARTS

Request for Quote

Contact Us

USA
4392 Broadway
Depew, NY 14043

Canada
2290 Industrial Street
Burlington, Ontario
L7P 1A1

888.842.5668
905.335.5523
info@rpmrubberparts.com