Spec Sheets

J-5425-169 Sandwich Mounts Unc Thread Type 3



Item # J-5425-169 Sandwich Mounts Unc Thread Type 3
Manufacturer: Lord Corporation

Specifications

A (in)	**3.12**
C (in)	**2.5**
Compression Spring Rate Kc (Imperial)	**2680**
Compression Spring Rate Kc (Metric)	**469**
Compression Static Load (lbs)	**1100**
Compression Static Load (Metric)	**4893**
D (in)	**0.75**
Durometer	**56**
Elastomer	**Natural Rubber**
Grade per SAE J429	**2**
Manufacturer	**Parker LORD**
Thread Size	**1/2-13 UNC**
Types	**3**

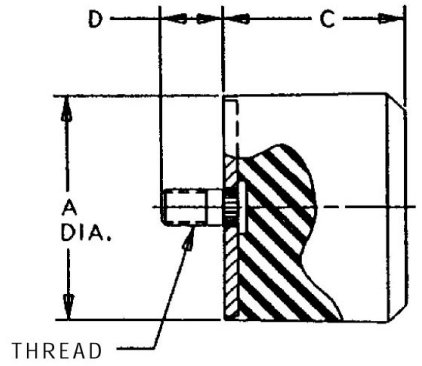

Flex-Bolt® Sandwich Mounts are Manufactured by LORD Corporation.

RPM INDUSTRIAL RUBBER PARTS

Request for Quote

Contact Us

USA
4392 Broadway
Depew, NY 14043

Canada
2290 Industrial Street
Burlington, Ontario
L7P 1A1

888.842.5668
905.335.5523
info@rpmrubberparts.com