Spec Sheets

# J-5425-27 Sandwich Mounts Unc Thread Type 2



**Item #** J-5425-27 Sandwich Mounts Unc Thread Type 2
**Manufacturer:** LORD Corporation

## Specifications

| | |
|---|---|
| **A (in)** | **3.12** |
| **B (in)** | **0.53** |
| **C (in)** | **3** |
| **Compression Spring Rate Kc (Imperial)** | **2750** |
| **Compression Spring Rate Kc (Metric)** | **482** |
| **Compression Static Load (lbs)** | **1540** |
| **Compression Static Load (Metric)** | **6850** |
| **D (in)** | **1.25** |
| **Durometer** | **58** |
| **Elastomer** | **Natural Rubber** |
| **Grade per SAE J429** | **2** |
| **Manufacturer** | **Parker LORD** |
| **Shear Spring Rate Ks (lbs/in)** | **650** |

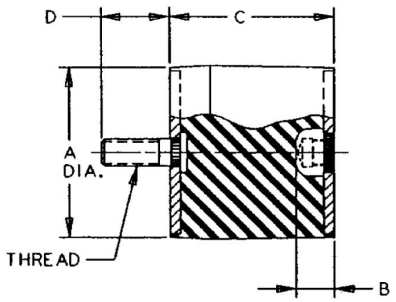


Flex-Bolt® Sandwich Mounts are Manufactured by LORD Corporation.

RPM INDUSTRIAL RUBBER PARTS

Request for Quote

Contact Us

**USA**
4392 Broadway
Depew, NY 14043

**Canada**
2290 Industrial Street
Burlington, Ontario
L7P 1A1

888.842.5668
905.335.5523
info@rpmrubberparts.com

Spec Sheets

# J-5425-27 Sandwich Mounts Unc Thread Type 2



**Item #** J-5425-27 Sandwich Mounts Unc Thread Type 2
**Manufacturer:** LORD Corporation

## Specifications (Continued)

| | |
|---|---|
| **Shear Spring Rate Ks (Metric)** | **114** |
| **Shear Static Load (lbs)** | **236** |
| **Shear Static Load (Metric)** | **1050** |
| **Thread Size** | **1/2-20 UNC** |
| **Types** | **2** |

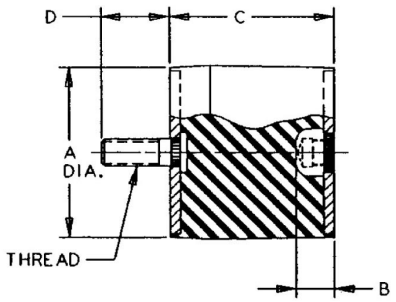


Flex-Bolt® Sandwich Mounts are Manufactured by LORD Corporation.

RPM INDUSTRIAL RUBBER PARTS

Request for Quote

Contact Us

**USA**
4392 Broadway
Depew, NY 14043

**Canada**
2290 Industrial Street
Burlington, Ontario
L7P 1A1

888.842.5668
905.335.5523
info@rpmrubberparts.com