Spec Sheets

SMA090-0900-3 Large Shear Mounts



Item # SMA090-0900-3 Large Shear Mounts
Manufacturer: Lord Corporation

Specifications

A (in)	9
B (in)	9
C (in)	7.5
Compression Spring Rate Kc (Imperial)	8400
Compression Spring Rate Kc (Metric)	1471
Compression Static Load (lbs)	6000
Compression Static Load (Metric)	26689
D (in)	7.5
E (in)	0.51
Elastomer	Natural Rubber
F (in)	4
F (mm)	101.6
Flange Thickness (in)	0.19

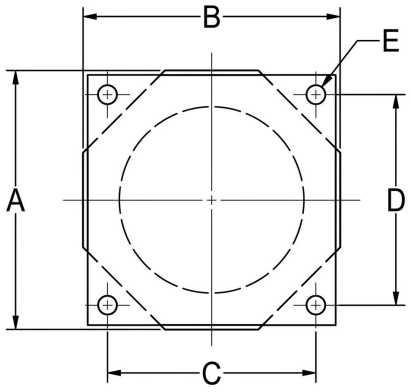

Compactor Mount

RPM INDUSTRIAL RUBBER PARTS

Request for Quote

Contact Us

USA
4392 Broadway
Depew, NY 14043

Canada
2290 Industrial Street
Burlington, Ontario
L7P 1A1

888.842.5668
905.335.5523
info@rpmrubberparts.com

Spec Sheets

SMA090-0900-3 Large Shear Mounts



Item # SMA090-0900-3 Large Shear Mounts
Manufacturer: Lord Corporation

Specifications (Continued)

Flange Thickness (mm)	**4.8**
G (in)	**6.5**
G (mm)	**165.1**
Grade per SAE J429	**2**
Manufacturer	**Parker LORD**
Shear Spring Rate Ks (lbs/in)	**1256**
Shear Spring Rate Ks (Metric)	**220**
Shear Static Load (lbs)	**900**
Shear Static Load (Metric)	**203**
Types	**5L**

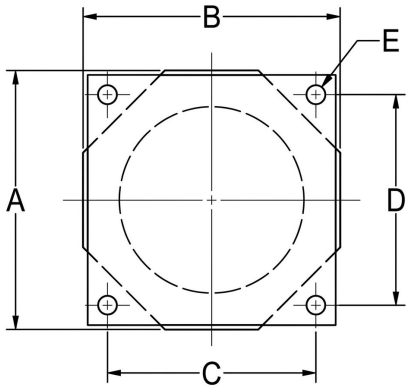

Compactor Mount

RPM INDUSTRIAL RUBBER PARTS

Request for Quote

Contact Us

USA
4392 Broadway
Depew, NY 14043

Canada
2290 Industrial Street
Burlington, Ontario
L7P 1A1

888.842.5668
905.335.5523
info@rpmrubberparts.com