Spec Sheets

SMA095-1200-1 Large Shear Mounts



Item # SMA095-1200-1 Large Shear Mounts
Manufacturer: LORD Corporation

Specifications

A (in)	9.44
B (in)	9.44
C (in)	7.5
Compression Spring Rate Kc (Imperial)	5800
Compression Spring Rate Kc (Metric)	1016
Compression Static Load (lbs)	5800
Compression Static Load (Metric)	25800
D (in)	7.5
E (in)	0.76
Elastomer	Natural Rubber
F (in)	5.5
F (mm)	139.7
Flange Thickness (in)	0.25

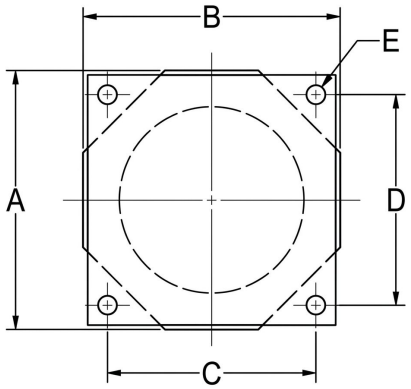

RPM INDUSTRIAL RUBBER PARTS

Request for Quote

Contact Us

USA
4392 Broadway
Depew, NY 14043

Canada
2290 Industrial Street
Burlington, Ontario
L7P 1A1

888.842.5668
905.335.5523
info@rpmrubberparts.com

Spec Sheets

SMA095-1200-1 Large Shear Mounts



Item # SMA095-1200-1 Large Shear Mounts
Manufacturer: LORD Corporation

Specifications (Continued)

Flange Thickness (mm)	6.4
G (in)	7.4
G (mm)	188.88
Grade per SAE J429	2
Manufacturer	Parker LORD
Shear Spring Rate Ks (lbs/in)	1500
Shear Spring Rate Ks (Metric)	270
Shear Static Load (lbs)	1200
Shear Static Load (Metric)	5338
Types	5L

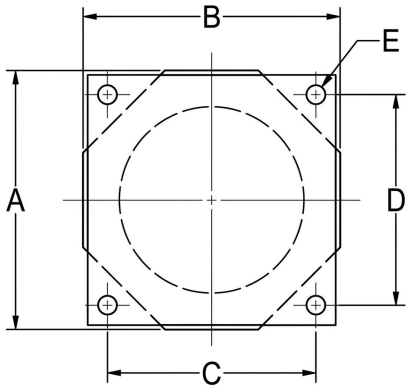

RPM INDUSTRIAL RUBBER PARTS

Request for Quote

Contact Us

USA
4392 Broadway
Depew, NY 14043

Canada
2290 Industrial Street
Burlington, Ontario
L7P 1A1

888.842.5668
905.335.5523
info@rpmrubberparts.com