Spec Sheets

VCM-66-70 Mount



Item # VCM-66-70 Mount
Manufacturer: RPM Mechanical Inc

Specifications

d (mm)	**18.8**
D (mm)	**66**
D1 (mm)	**39.8**
H (mm)	**38**
H1 (mm)	**29.5**
C (mm)	**40.0-40.3**
E (mm)	**19/20**
Bolt Size	**M16**
Max. Bolt Torque (N/m)	**240**
Max Load (kg)	**70**

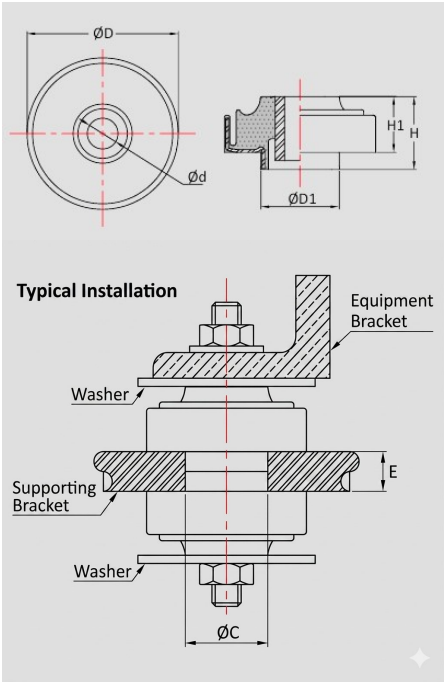

RPM INDUSTRIAL RUBBER PARTS

Request for Quote

Contact Us

USA
4392 Broadway
Depew, NY 14043

Canada
2290 Industrial Street
Burlington, Ontario
L7P 1A1

888.842.5668
905.335.5523
info@rpmrubberparts.com