Spec Sheets

VKO-403-450 Conical Mount

Item # VKO-403-450 Conical Mount

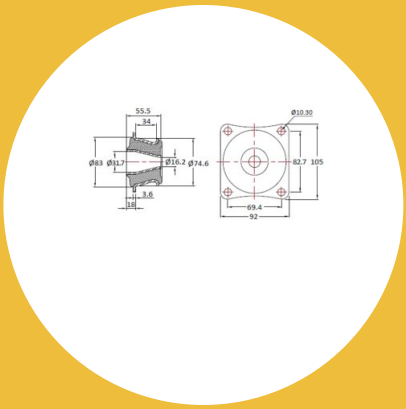

Specifications

Manufacturer	**RPM Mechanical Inc.**
Holes	**4**
Hole Size (in)	**0.41**
Hole Size (mm)	**10.3**
Element Width (in)	**2.94**
Element Width (mm)	**74.6**
Height (in)	**2.19**
Height (mm)	**55.5**
Overall Width (in)	**3.63**
Overall Width (mm)	**92**
Overall Length (in)	**4.14**
Overall Length (mm)	**105**
CF (in)	**2.73-3.26**

RPM INDUSTRIAL RUBBER PARTS

Request for Quote

Contact Us

USA
4392 Broadway
Depew, NY 14043

Canada
2290 Industrial Street
Burlington, Ontario
L7P 1A1

888.842.5668
905.335.5523
info@rpmrubberparts.com

Spec Sheets

VKO-403-450 Conical Mount

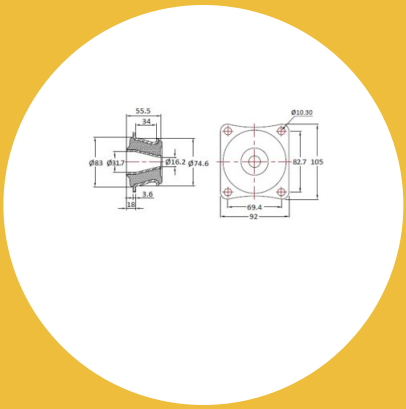

Item # VKO-403-450 Conical Mount

Specifications (Continued)

CF (Metric)	**69.4 x 82.7**
Center Hole (in)	**0.64**
Center Hole (mm)	**16.2**
Durometer	**70**
Max Radial Static Load Rating (lbs)	**992.08**
Max Radial Static Load Rating (kg)	**450**
Deflection at Rated Load (in)	**0.24**
Deflection at Rated Load (mm)	**6**

RPM INDUSTRIAL RUBBER PARTS

Request for Quote

Contact Us

USA
4392 Broadway
Depew, NY 14043

Canada
2290 Industrial Street
Burlington, Ontario
L7P 1A1

888.842.5668
905.335.5523
info@rpmrubberparts.com