Spec Sheets

VMD-1025N Sandwich Mounts Metric Thread Type 3



Item # VMD-1025N Sandwich Mounts Metric Thread Type 3
Manufacturer: RPM Mechanical Inc

Specifications

A (in)	**4**
C (in)	**1**
Compression Spring Rate Kc (Imperial)	**409**
Compression Spring Rate Kc (Metric)	**2311**
Compression Static Load (lbs)	**1636**
Compression Static Load (Metric)	**7278**
D (in)	**1.77**
Durometer	**43**
Elastomer	**Natural Rubber**
Grade per SAE J429	**1**
Manufacturer	**RPM Mechanical Inc.**
Thread Size	**M16**
Thread Type	**Metric**

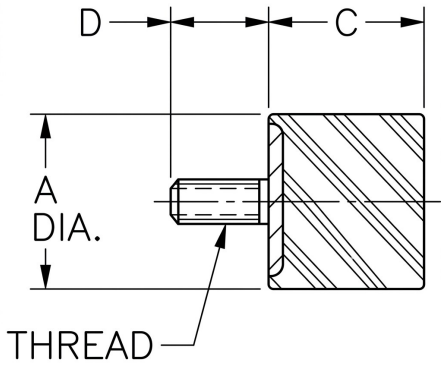

Vibration Bumper Foot

RPM INDUSTRIAL RUBBER PARTS

Request for Quote

Contact Us

USA
4392 Broadway
Depew, NY 14043

Canada
2290 Industrial Street
Burlington, Ontario
L7P 1A1

888.842.5668
905.335.5523
info@rpmrubberparts.com

Spec Sheets

VMD-1025N Sandwich Mounts Metric Thread Type 3



Item # VMD-1025N Sandwich Mounts Metric Thread Type 3
Manufacturer: RPM Mechanical Inc

Specifications (Continued)

Types	**3**

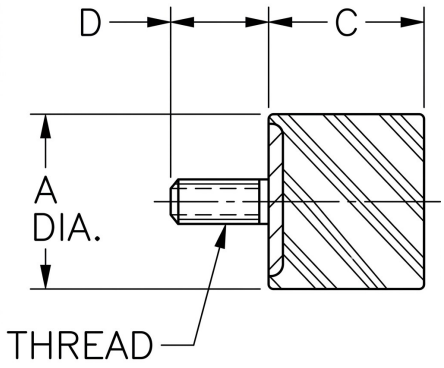

Vibration Bumper Foot

RPM INDUSTRIAL RUBBER PARTS

Request for Quote

Contact Us

USA
4392 Broadway
Depew, NY 14043

Canada
2290 Industrial Street
Burlington, Ontario
L7P 1A1

888.842.5668
905.335.5523
info@rpmrubberparts.com