Spec Sheets

VMD-3015DU Sandwich Mounts Unc Thread Type 3

Item # VMD-3015DU Sandwich Mounts Unc Thread Type 3
Manufacturer: RPM Mechanical Inc

Specifications

A (in)	1.18
C (in)	0.59
Compression Spring Rate Kc (Imperial)	58
Compression Spring Rate Kc (Metric)	58
Compression Static Load (lbs)	144
Compression Static Load (Metric)	642
D (in)	0.75
Durometer	57
Elastomer	Natural Rubber
Grade per SAE J429	1
Manufacturer	RPM Mechanical Inc.
Thread Size	5/16-18 UNC
Thread Type	Standard UNC

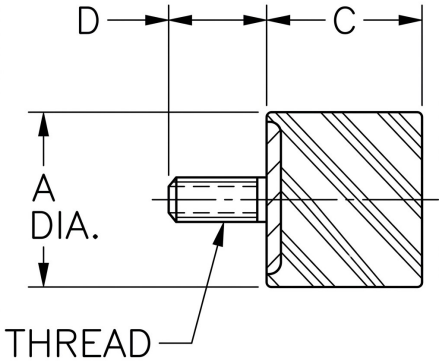

RPM INDUSTRIAL RUBBER PARTS

Request for Quote

Contact Us

USA
4392 Broadway
Depew, NY 14043

Canada
2290 Industrial Street
Burlington, Ontario
L7P 1A1

888.842.5668
905.335.5523
info@rpmrubberparts.com

Spec Sheets

VMD-3015DU Sandwich Mounts Unc Thread Type 3

Item # VMD-3015DU Sandwich Mounts Unc Thread Type 3
Manufacturer: RPM Mechanical Inc

Specifications (Continued)

Types	**3**

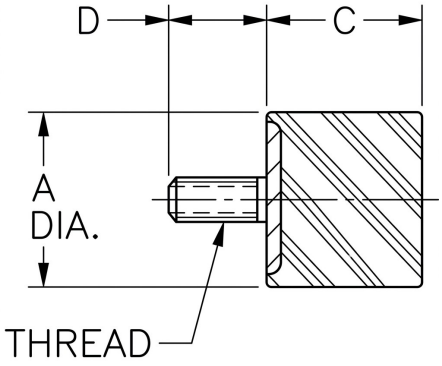

RPM INDUSTRIAL RUBBER PARTS

Request for Quote

Contact Us

USA
4392 Broadway
Depew, NY 14043

Canada
2290 Industrial Street
Burlington, Ontario
L7P 1A1

888.842.5668
905.335.5523
info@rpmrubberparts.com