Spec Sheets

# VMD-4038N Sandwich Mounts Metric Thread Type 3



**Item #** VMD-4038N Sandwich Mounts Metric Thread Type 3
**Manufacturer:** RPM Mechanical Inc

## Specifications

| | |
|---|---|
| **A (in)** | **1.57** |
| **C (in)** | **1.5** |
| **Compression Spring Rate Kc (Imperial)** | **14** |
| **Compression Spring Rate Kc (Metric)** | **81** |
| **Compression Static Load (lbs)** | **98** |
| **Compression Static Load (Metric)** | **437** |
| **D (in)** | **0.91** |
| **Durometer** | **43** |
| **Elastomer** | **Natural Rubber** |
| **Grade per SAE J429** | **1** |
| **Manufacturer** | **RPM Mechanical Inc.** |
| **Thread Size** | **M8** |
| **Thread Type** | **Metric** |

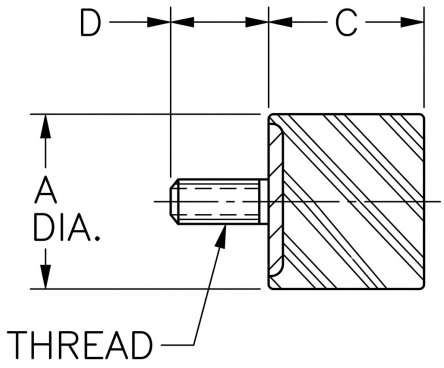


Vibration Bumper Foot

RPM INDUSTRIAL RUBBER PARTS

Request for Quote

Contact Us

**USA**
4392 Broadway
Depew, NY 14043

**Canada**
2290 Industrial Street
Burlington, Ontario
L7P 1A1

888.842.5668
905.335.5523
info@rpmrubberparts.com

Spec Sheets

# VMD-4038N Sandwich Mounts Metric Thread Type 3



**Item #** VMD-4038N Sandwich Mounts Metric Thread Type 3
**Manufacturer:** RPM Mechanical Inc

## Specifications (Continued)

| | |
|---|---|
| **Types** | **3** |

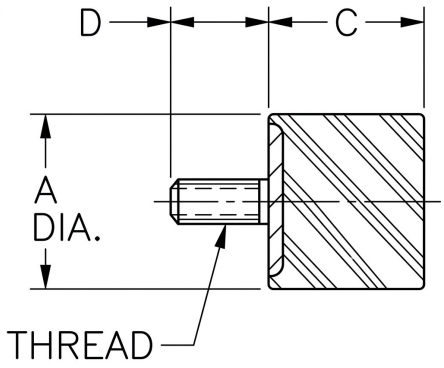


Vibration Bumper Foot

RPM INDUSTRIAL RUBBER PARTS

Request for Quote

Contact Us

**USA**
4392 Broadway
Depew, NY 14043

**Canada**
2290 Industrial Street
Burlington, Ontario
L7P 1A1

888.842.5668
905.335.5523
info@rpmrubberparts.com