Spec Sheets

VMD-6015D Sandwich Mounts Metric Thread Type 3



Item # VMD-6015D Sandwich Mounts Metric Thread Type 3
Manufacturer: RPM Mechanical Inc

Specifications

A (in)	2.35
C (in)	0.59
Compression Spring Rate Kc (Imperial)	94
Compression Spring Rate Kc (Metric)	2849
Compression Static Load (lbs)	1153
Compression Static Load (Metric)	3508
D (in)	1.06
Durometer	57
Elastomer	Natural Rubber
Grade per SAE J429	1
Manufacturer	RPM Mechanical Inc.
Thread Size	M10
Thread Type	Metric

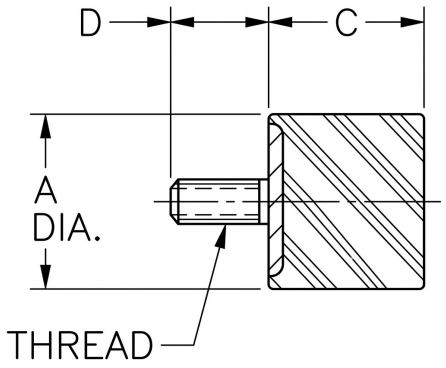

Vibration Bumper Foot

RPM INDUSTRIAL RUBBER PARTS

Request for Quote

Contact Us

USA
4392 Broadway
Depew, NY 14043

Canada
2290 Industrial Street
Burlington, Ontario
L7P 1A1

888.842.5668
905.335.5523
info@rpmrubberparts.com

Spec Sheets

VMD-6015D Sandwich Mounts Metric Thread Type 3



Item # VMD-6015D Sandwich Mounts Metric Thread Type 3
Manufacturer: RPM Mechanical Inc

Specifications (Continued)

Types	**3**

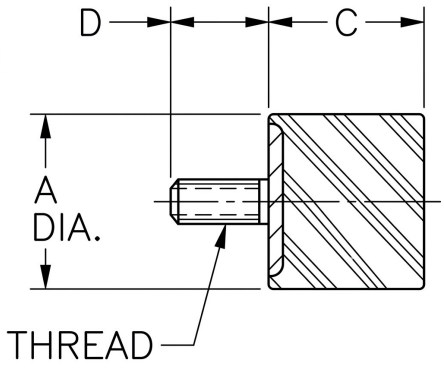

Vibration Bumper Foot

RPM INDUSTRIAL RUBBER PARTS

Request for Quote

Contact Us

USA
4392 Broadway
Depew, NY 14043

Canada
2290 Industrial Street
Burlington, Ontario
L7P 1A1

888.842.5668
905.335.5523
info@rpmrubberparts.com