Spec Sheets

# VME-1035E Sandwich Mounts Metric Thread Type 5



**Item #** VME-1035E Sandwich Mounts Metric Thread Type 5
**Manufacturer:** RPM Mechanical

## Specifications

| | |
|---|---|
| A (in) | 4 |
| B (in) | 0.63 |
| C (in) | 1.38 |
| Compression Spring Rate Kc (Imperial) | 232 |
| Compression Spring Rate Kc (Metric) | 2605 |
| Compression Static Load (lbs) | 2354 |
| Compression Static Load (Metric) | 10473 |
| Durometer | 57 |
| Elastomer | Natural Rubber |
| Manufacturer | |
| Thread Size | M16 |
| Thread Type | Metric |
| Types | 5 |

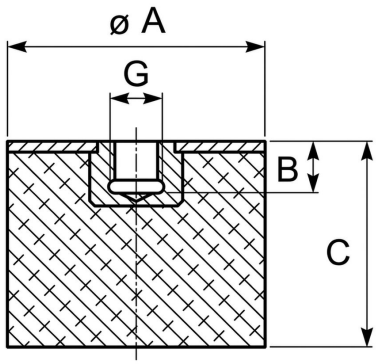


RPM INDUSTRIAL RUBBER PARTS

Request for Quote

Contact Us

**USA**
4392 Broadway
Depew, NY 14043

**Canada**
2290 Industrial Street
Burlington, Ontario
L7P 1A1

888.842.5668
905.335.5523
info@rpmrubberparts.com