Spec Sheets

VME-1045Q Sandwich Mounts Metric Thread Type 5



Item # VME-1045Q Sandwich Mounts Metric Thread Type 5
Manufacturer: RPM Mechanical

Specifications

A (in)	4
B (in)	0.63
C (in)	1.77
Compression Spring Rate Kc (Imperial)	416
Compression Spring Rate Kc (Metric)	2352
Compression Static Load (lbs)	2917
Compression Static Load (Metric)	12981
Durometer	68
Elastomer	Natural Rubber
Manufacturer	
Thread Size	M16
Thread Type	Metric
Types	5

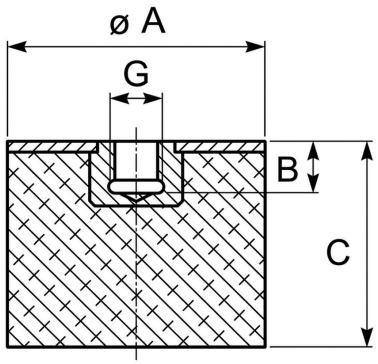

RPM INDUSTRIAL RUBBER PARTS

Request for Quote

Contact Us

USA
4392 Broadway
Depew, NY 14043

Canada
2290 Industrial Street
Burlington, Ontario
L7P 1A1

888.842.5668
905.335.5523
info@rpmrubberparts.com