Spec Sheets

# VME-1050EU Sandwich Mounts Unc Thread Type 5



**Item #** VME-1050EU Sandwich Mounts Unc Thread Type 5
**Manufacturer:** RPM Mechanical Inc

## Specifications

| | |
|---|---|
| A (in) | 4 |
| B (in) | 0.63 |
| C (in) | 2 |
| Compression Spring Rate Kc (Imperial) | 1165 |
| Compression Spring Rate Kc (Metric) | 1165 |
| Compression Static Load (lbs) | 1642 |
| Compression Static Load (Metric) | 7307 |
| Durometer | 57 |
| Elastomer | Natural Rubber |
| Manufacturer | RPM Mechanical Inc. |
| Thread Size | 5/8-11 UNC |
| Thread Type | Standard UNC |
| Types | 5 |

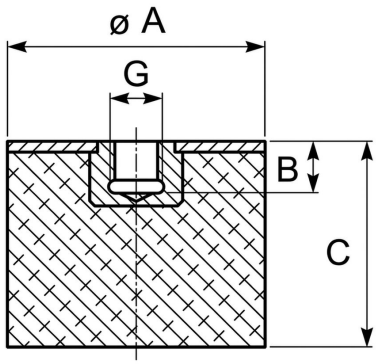


RPM INDUSTRIAL RUBBER PARTS

Request for Quote

Contact Us

**USA**
4392 Broadway
Depew, NY 14043

**Canada**
2290 Industrial Street
Burlington, Ontario
L7P 1A1

888.842.5668
905.335.5523
info@rpmrubberparts.com