Spec Sheets

VME-2025OU Sandwich Mounts Unc Thread Type 5



Item # VME-2025OU Sandwich Mounts Unc Thread Type 5
Manufacturer: RPM Mechanical Inc

Specifications

A (in)	0.79
B (in)	0.24
C (in)	1
Compression Spring Rate Kc (Imperial)	36
Compression Spring Rate Kc (Metric)	36
Compression Static Load (lbs)	1.7
Compression Static Load (Metric)	9
Durometer	43
Elastomer	Natural Rubber
Manufacturer	RPM Mechanical Inc.
Thread Size	1/4-20 UNC
Thread Type	Standard UNC
Types	5

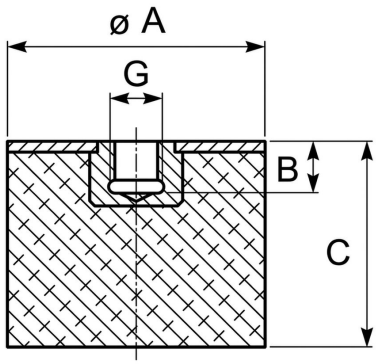

RPM INDUSTRIAL RUBBER PARTS

Request for Quote

Contact Us

USA
4392 Broadway
Depew, NY 14043

Canada
2290 Industrial Street
Burlington, Ontario
L7P 1A1

888.842.5668
905.335.5523
info@rpmrubberparts.com