Spec Sheets

VME-2525OU Sandwich Mounts Unc Thread Type 5



Item # VME-2525OU Sandwich Mounts Unc Thread Type 5
Manufacturer: RPM Mechanical Inc

Specifications

A (in)	**1**
B (in)	**0.24**
C (in)	**1**
Compression Spring Rate Kc (Imperial)	**54**
Compression Spring Rate Kc (Metric)	**54**
Compression Static Load (lbs)	**39**
Compression Static Load (Metric)	**174**
Durometer	**43**
Elastomer	**Natural Rubber**
Manufacturer	**RPM Mechanical Inc.**
Thread Size	**1/4-20 UNC**
Thread Type	**Standard UNC**
Types	**5**

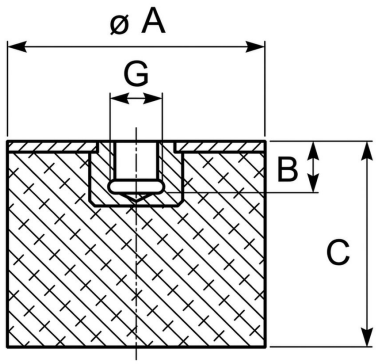

RPM INDUSTRIAL RUBBER PARTS

Request for Quote

Contact Us

USA
4392 Broadway
Depew, NY 14043

Canada
2290 Industrial Street
Burlington, Ontario
L7P 1A1

888.842.5668
905.335.5523
info@rpmrubberparts.com