Spec Sheets

VME-2525Q Sandwich Mounts Metric Thread Type 5



Item # VME-2525Q Sandwich Mounts Metric Thread Type 5
Manufacturer: RPM Mechanical

Specifications

A (in)	1
B (in)	0.24
C (in)	1
Compression Spring Rate Kc (Imperial)	39
Compression Spring Rate Kc (Metric)	174
Compression Static Load (lbs)	7
Compression Static Load (Metric)	40
Durometer	68
Elastomer	Natural Rubber
Manufacturer	
Thread Size	M6
Thread Type	Metric
Types	5

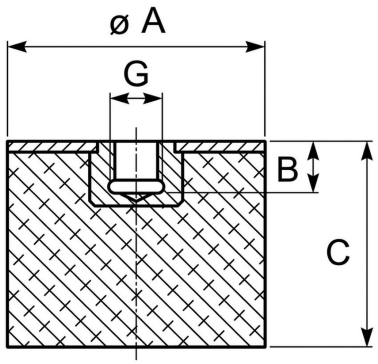

RPM INDUSTRIAL RUBBER PARTS

Request for Quote

Contact Us

USA
4392 Broadway
Depew, NY 14043

Canada
2290 Industrial Street
Burlington, Ontario
L7P 1A1

888.842.5668
905.335.5523
info@rpmrubberparts.com