Spec Sheets

VME-4025Q Sandwich Mounts Metric Thread Type 5



Item # VME-4025Q Sandwich Mounts Metric Thread Type 5
Manufacturer: RPM Mechanical

Specifications

A (in)	1.57
B (in)	0.31
C (in)	1
Compression Spring Rate Kc (Imperial)	96
Compression Spring Rate Kc (Metric)	475
Compression Static Load (lbs)	376
Compression Static Load (Metric)	1674
Durometer	68
Elastomer	Natural Rubber
Manufacturer	
Thread Size	M8
Thread Type	Metric
Types	5

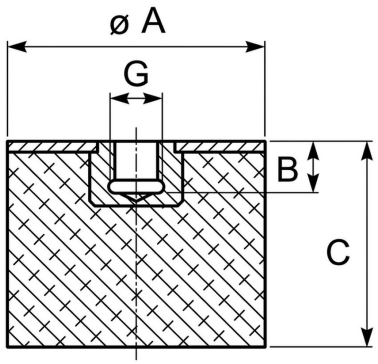

RPM INDUSTRIAL RUBBER PARTS

Request for Quote

Contact Us

USA
4392 Broadway
Depew, NY 14043

Canada
2290 Industrial Street
Burlington, Ontario
L7P 1A1

888.842.5668
905.335.5523
info@rpmrubberparts.com