Spec Sheets

VME-4028QU Sandwich Mounts Unc Thread Type 5



Item # VME-4028QU Sandwich Mounts Unc Thread Type 5
Manufacturer: RPM Mechanical Inc

Specifications

A (in)	1.57
B (in)	0.31
C (in)	1.1
Compression Spring Rate Kc (Imperial)	442
Compression Spring Rate Kc (Metric)	442
Compression Static Load (lbs)	2448
Compression Static Load (Metric)	1558
Durometer	68
Elastomer	Natural Rubber
Manufacturer	RPM Mechanical Inc.
Thread Size	5/16-18 UNC
Thread Type	Standard UNC
Types	5

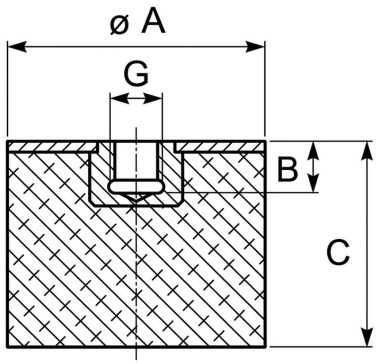

RPM INDUSTRIAL RUBBER PARTS

Request for Quote

Contact Us

USA
4392 Broadway
Depew, NY 14043

Canada
2290 Industrial Street
Burlington, Ontario
L7P 1A1

888.842.5668
905.335.5523
info@rpmrubberparts.com