Spec Sheets

VME-5017E Sandwich Mounts Metric Thread Type 5



Item # VME-5017E Sandwich Mounts Metric Thread Type 5
Manufacturer: RPM Mechanical

Specifications

A (in)	2
B (in)	0.38
C (in)	0.67
Compression Spring Rate Kc (Imperial)	416
Compression Spring Rate Kc (Metric)	2354
Compression Static Load (lbs)	796
Compression Static Load (Metric)	3545
Durometer	57
Elastomer	Natural Rubber
Manufacturer	
Thread Size	M10
Thread Type	Metric
Types	5

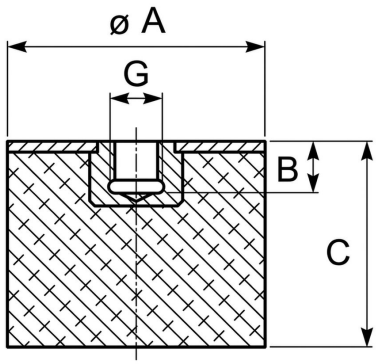

RPM INDUSTRIAL RUBBER PARTS

Request for Quote

Contact Us

USA
4392 Broadway
Depew, NY 14043

Canada
2290 Industrial Street
Burlington, Ontario
L7P 1A1

888.842.5668
905.335.5523
info@rpmrubberparts.com