Spec Sheets

# VME-5045E Sandwich Mounts Metric Thread Type 5

**Item #** VME-5045E Sandwich Mounts Metric Thread Type 5
**Manufacturer:** RPM Mechanical

## Specifications

| | |
|---|---|
| **A (in)** | **2** |
| **B (in)** | **0.38** |
| **C (in)** | **1.77** |
| **Compression Spring Rate Kc (Imperial)** | **41** |
| **Compression Spring Rate Kc (Metric)** | **235** |
| **Compression Static Load (lbs)** | **301** |
| **Compression Static Load (Metric)** | **1342** |
| **Durometer** | **57** |
| **Elastomer** | **Natural Rubber** |
| **Manufacturer** | |
| **Thread Size** | **M10** |
| **Thread Type** | **Metric** |
| **Types** | **5** |

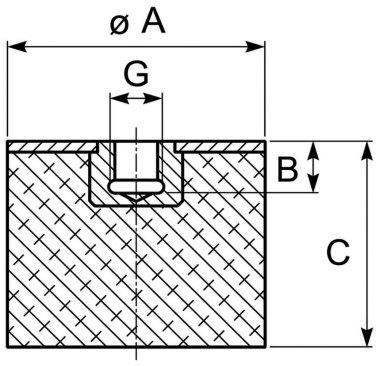



RPM INDUSTRIAL RUBBER PARTS

Request for Quote

Contact Us

**USA**
4392 Broadway
Depew, NY 14043

**Canada**
2290 Industrial Street
Burlington, Ontario
L7P 1A1

888.842.5668
905.335.5523
info@rpmrubberparts.com