Spec Sheets

VMS-1609-65-M16 Marine Mount



Item # VMS-1609-65-M16 Marine Mount

Specifications

A (mm)	183
B (mm)	50
C (mm)	75
D (mm)	140
F (mm)	13
G (mm)	30
J (mm)	20
M (mm)	M16
S (mm)	4
Max Load (kg)	300

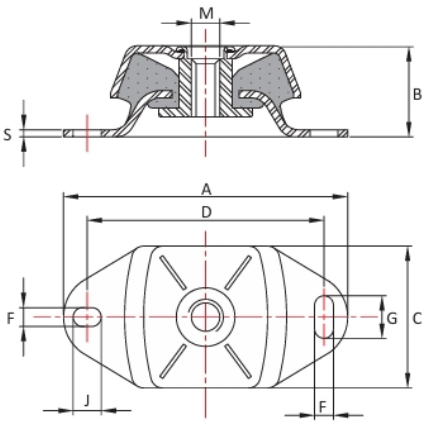

RPM INDUSTRIAL RUBBER PARTS

Request for Quote

Contact Us

USA
4392 Broadway
Depew, NY 14043

Canada
2290 Industrial Street
Burlington, Ontario
L7P 1A1

888.842.5668
905.335.5523
info@rpmrubberparts.com