RPM INDUSTRIAL RUBBER PARTS

CANADA
2290 Industrial Street
Burlington, Ontario L7P 1A1

USA
4392 Broadway
Depew, NY 14043, USA

888.842.5668
905.335.5523
rpmrubberparts.com

BS-36 GREY

in Square Bumpers

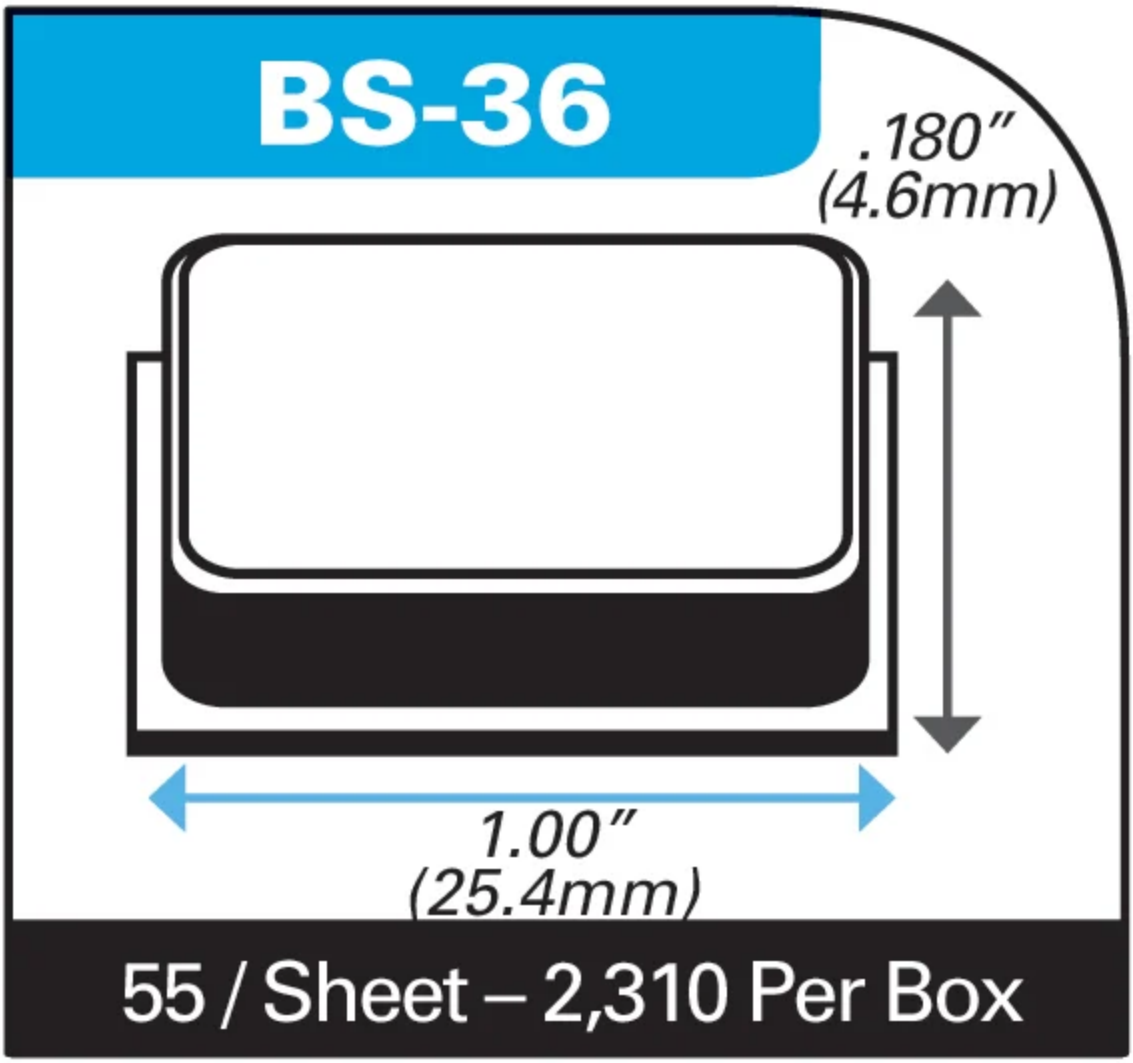

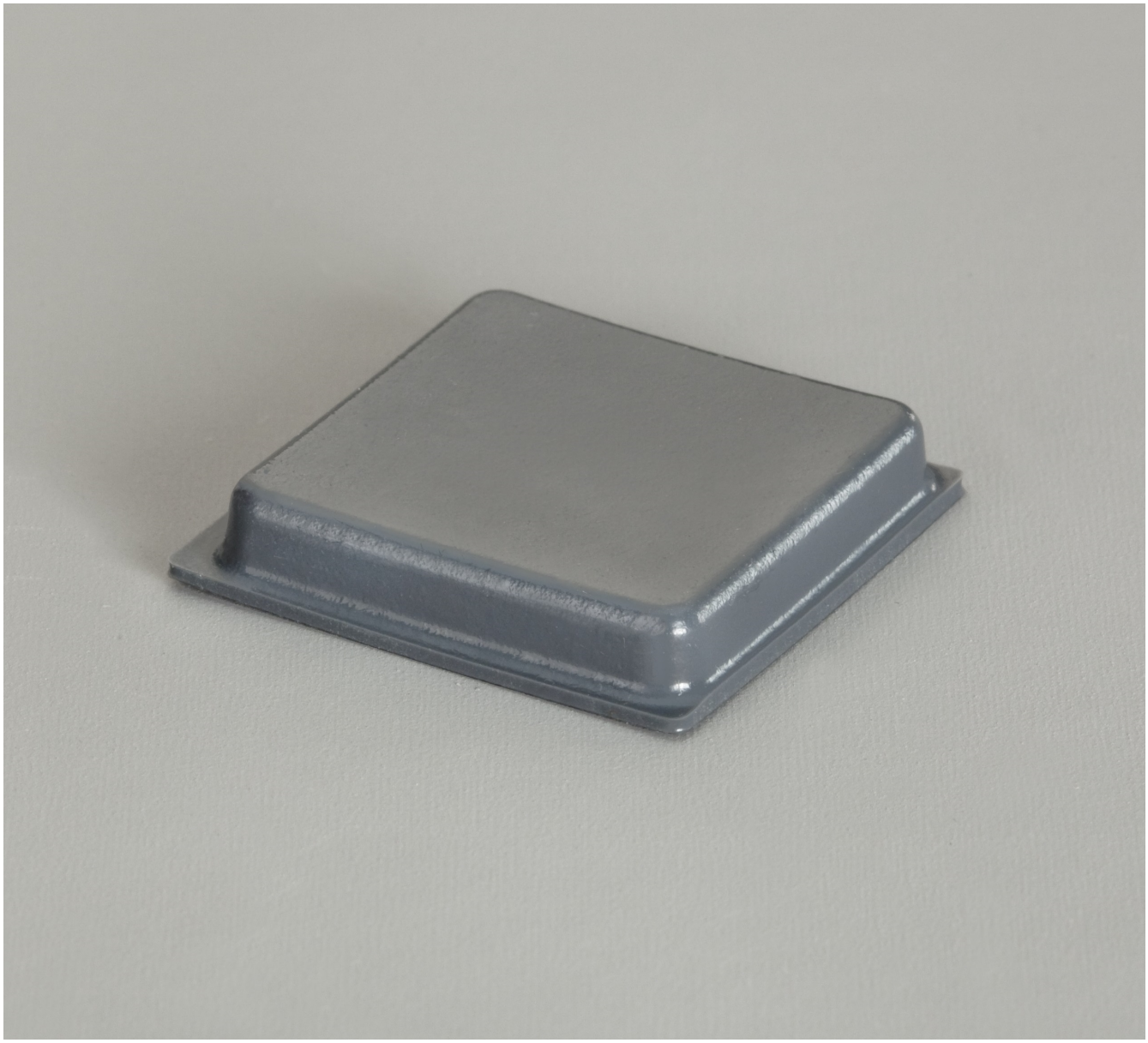

RPM Self Adhesive Bumpers are made of a permanently resilient polyurethane polymer formulated especially for its unique high coefficient of friction, non-slip, non-marring features. An aggressive synthetic rubber, high tack, pressure sensitive adhesive protected with an easy release liner makes application fast and easy.

* High Performance Acrylic Adhesive available on request.

* Also available in BLACK, BROWN, GREY, WHITE and CLEAR. Custom Colors on request.

Specifications

HEIGHT (IN)	.180
WIDTH (IN)	1.00
COLOR	GREY

MANUFACTURER	RPM Mechanical Inc
TYPE	SQUARE