RPM INDUSTRIAL RUBBER PARTS

CANADA
2290 Industrial Street
Burlington, Ontario L7P 1A1

USA
4392 Broadway
Depew, NY 14043, USA

888.842.5668
905.335.5523
rpmrubberparts.com

VMD-7055N

in Sandwich Mounts (Metric Thread) Type 3

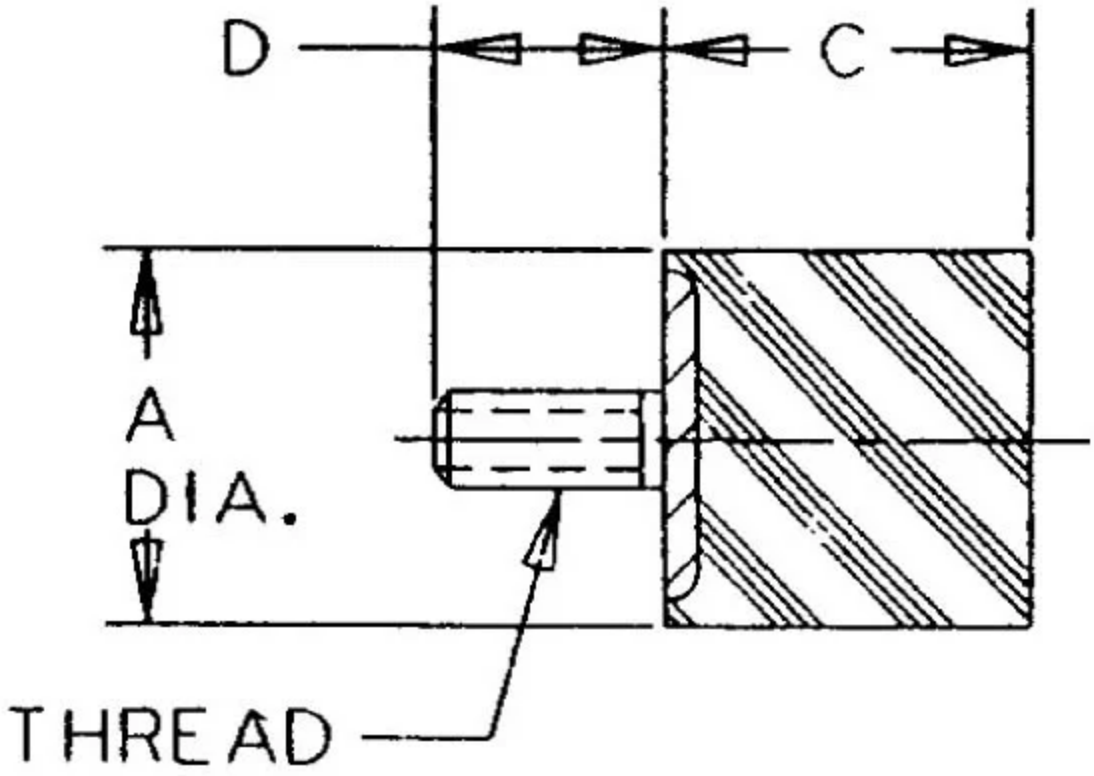

Vibration Bumper Foot

- Economical.
- Compact and lightweight.
- Easy to install.
- Maintenance-free.

RPM Rubber Flex Bobbin Sandwich Mounts are designed to protect equipment and machinery against damaging vibration. This family of mounts has excellent capacity for energy control. Constructed with high-strength bonds and specially compounded elastomers, these mounts provide high load-carrying capacity and assure long life.

The simple design and unitized construction provide low-cost mounting systems which are compact, lightweight, easy to install and maintenance-free.

Typical applications for Rubber Flex Bobbin Sandwich Mounts include business machines, motorcycles, heating, ventilating and air conditioning equipment, light motors, appliances, shipping containers, feeders, compactors and vibratory rollers.

Specifications

COMPRESSION STATIC LOAD (LBS)	322
COMPRESSION STATIC LOAD (N)	1433
COMPRESSION - SPRING RATE KC (LBS/IN)	33
COMPRESSION - SPRING RATE KC (N/MM)	184
A (IN)	2 3/4
C (IN)	2.15
D (IN)	1.18
THREAD SIZE	M10
DUROMETER	43
ELASTOMER	Natural Rubber
THREAD TYPE	Metric
PRODUCT TYPE	
MANUFACTURER	RPM Mechanical Inc
TYPE	3
GRADE PER SAE J429	1